TWP LED
LED Wall Luminaire

Catalog Number

Notes

Type

Hit the Tab key or mouse over the page to see all interactive elements.

Introduction

The popular TWP luminaire is now available with LED technology. Cast in a traditional dayform, the TWP LED offers a classic appearance and is powered by advanced LEDs. A one-piece polycarbonate cover delivers enhanced durability and is vandal resistant, making the TWP LED ideal for lower mounting heights or high-traffic areas.

The new TWP LED luminaire is powerful yet energy efficient, capable of replacing up to a 250W metal halide luminaire while saving up to 77% in energy costs. Offering an expected service life of more than 20 years, the TWP LED eliminates frequent lamp and ballast replacements associated with traditional technologies.

Specifications

Width: 16-1/8″ *(41.0 cm)*

Height: 15-1/2″ *(39.4 cm)*

Depth: 7-3/4″ *(19.7 cm)*

Weight: 15 lbs *(6.8kg)*

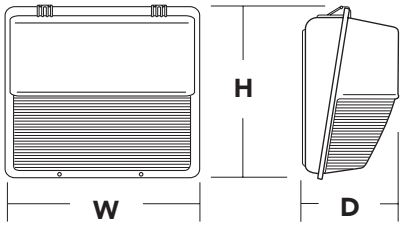

Ordering Information

EXAMPLE: TWP LED 30C 700 50K T3M MVOLT DDBXD

TWP LED						
Series	**Performance Package**	**Distribution**	**Voltage**	**Control Options**	**Other Options**	**Finish** *(required)*
TWP LED	**LEDs** 10C 10 LEDs (one engine) 20C 20 LEDs (two engines) 30C 30 LEDs (one engine) **Drive current** 700 700 mA **Color temperature** 50K 5000 K (standard) 40K 4000 K (optional)	T3M Type III Medium	MVOLT [1] 120 [1] 208 [1] 240 [1] 277 [1] 347 [2] 480 [2]	**Shipped installed** DMG 0-10V dimming driver (no controls) PE Photoelectric cell, button type [3]	**Shipped installed** SF Single fuse (120, 277, 347V) [4] DF Double fuse (208, 240, 480V) [4] TP Tamper proof screws NOM NOM Certified SPD Separate surge protection [5] **Shipped separately** WG Wire guard [6]	DDBXD Dark bronze DBLXD Black DWHXD White DDBTXD Textured dark bronze DBLBXD Textured black DWHGXD Textured white

Stock configurations are offered for shorter lead times:

Standard Part Number	Stock Part Number
TWP LED 10C 700 50K T3M MVOLT DDBXD	**TWP LED 10C 50K**
TWP LED 20C 700 50K T3M MVOLT DDBXD	**TWP LED 20C 50K**
TWP LED 30C 700 50K T3M MVOLT DDBXD	**TWP LED 30C 50K**

Accessories

Ordered and shipped separately.

TWPWG U	Wire guard accessory [7]

NOTES

1. MVOLT driver operates on any line voltage from 120-277V (50/60 Hz). Specify 120, 208, 240 or 277 options only when ordering with fusing (SF, DF options) or photocontrol (PE).
2. Not available with 10C option.
3. Must specify voltage; not available with MVOLT or 480 voltage options.
4. Single fuse (SF) requires 120, 277 or 347 voltage option. Double fuse (DF) requires 208, 240 or 480 voltage option.
5. See the electrical section on page 2 for more details.
6. Also available as a separate accessory; see Accessories information at left.
7. Requires field modification (only when ordered as a separate accessory).

LITHONIA LIGHTING

One Lithonia Way • Conyers, Georgia 30012 • Phone: 800.279.8041 • Fax: 770.918.1209 • www.lithonia.com

© 2012-2015 Acuity Brands Lighting, Inc. All rights reserved.

Performance Data

Lumen Output

Lumen values are from photometric tests performed in accordance with IESNA LM-79-08. Data is considered to be representative of the configurations shown, within the tolerances allowed by Lighting Facts. Contact factory for performance data on any configurations not shown here.

LEDs	Drive Current (mA)	Performance Package	System Watts	Dist. Type	40K (4000 K, 70 CRI)					50K (5000 K, 65 CRI)				
					Lumens	B	U	G	LPW	Lumens	B	U	G	LPW
10C (10 LEDs)	700	10C 700 --K	26 W	T3M	1,478	0	3	2	57	1,614	0	3	2	62
20C (20 LEDs)	700	20C 700 --K	45 W	T3M	2,877	0	3	3	64	3,149	0	3	3	70
30C (30 LEDs)	700	30C 700 --K	67 W	T3M	4,157	0	3	3	62	4,377	0	3	3	65

Lumen Ambient Temperature (LAT) Multipliers

Use these factors to determine relative lumen output for average ambient temperatures from 0-40°C (32-104°F).

Ambient		Lumen Multiplier
0°C	32°F	1.02
10°C	50°F	1.01
20°C	68°F	1.00
25°C	**77°F**	**1.00**
30°C	86°F	1.00
40°C	104°F	0.98

Projected LED Lumen Maintenance

Data references the extrapolated performance projections for the **TWP LED 30C 700** platform in a **25°C ambient**, based on 10,000 hours of LED testing (tested per IESNA LM-80-08 and projected per IESNA TM-21-11).

To calculate LLF, use the lumen maintenance factor that corresponds to the desired number of operating hours below. For other lumen maintenance values, contact factory.

Operating Hours	0	25,000	50,000	100,000
Lumen Maintenance Factor	1.0	0.97	0.96	0.94

Electrical Load

LEDs	Drive Current (mA)	System Watts	Current (A)					
			120V	208V	240V	277V	347V	480V
10C	700	26 W	0.24	0.14	0.12	0.10	-	-
20C	700	45 W	0.42	0.24	0.21	0.18	0.14	0.10
30C	700	67 W	0.62	0.36	0.31	0.27	0.21	0.16

Photometric Diagrams

To see complete photometric reports or download .ies files for this product, visit Lithonia Lighting's TWP LED homepage.

Isofootcandle plots for the TWP LED --- 700 50K T3M. Distances are in units of mounting height (15').

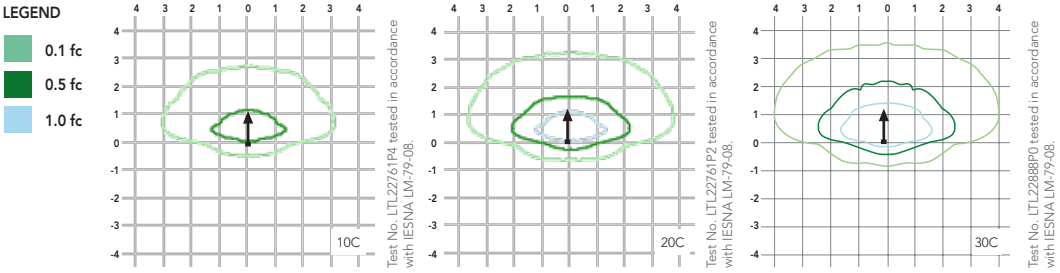

FEATURES & SPECIFICATIONS

INTENDED USE
The energy savings, long life and easy-to-install design of the TWP LED make it the smart choice for building-mounted doorway and pathway illumination for nearly any facility.

CONSTRUCTION
Die-cast aluminum rear housing has an impact-resistant, UV-stabilized polycarbonate front housing and refractor that is fully gasketed. Modular design allows for ease of maintenance. The LED driver is mounted to the front casting to thermally isolate it from the light engine for low operating temperature and long life. Housing is completely sealed against moisture and environmental contaminants.

FINISH
Exterior parts are protected by a zinc-infused Super Durable TGIC thermoset powder coat finish that provides superior resistance to corrosion and weathering. A tightly controlled multi-stage process ensures a minimum 3 mils thickness for a finish that can withstand extreme climate changes without cracking or peeling. Available in textured and non-textured finishes.

OPTICS
Protective polycarbonate lens covers the light engine's precision-molded proprietary acrylic lenses. Light engines are available in 5000 K (65 min. CRI) configurations.

ELECTRICAL
Light engine(s) consist of 10 or 30 high-efficacy LEDs mounted to a metal-core circuit board and integral aluminum heat sink to maximize heat dissipation and promote long life (L94/100,000 hrs at 25°C). The electronic driver has a power factor of >90%, THD <20%, and a minimum 2.5 KV surge rating. When ordering the SPD option, a separate surge protection device is installed within the luminaire which meets a minimum Category C low operation (per ANSI/IEEE C62.41.2).

INSTALLATION
Top 3/4" threaded wiring access. Back access through removable 3/4" knockout. Feed-thru wiring can be achieved by using a condulet tee. Mount on any flat, vertical surface.

LISTINGS
UL listed for wet locations. Rated for -40°C minimum ambient.

WARRANTY
Five year limited warranty. Full warranty terms located at www.acuitybrands.com/CustomerResources/Terms_and_conditions.aspx.

Note: Actual performance may differ as a result of end-user environment and application. All values are design or typical values, measured under laboratory conditions at 25 °C. Specifications subject to change without notice.

© 2012-2015 Acuity Brands Lighting, Inc. All rights reserved.

Photometric Report

CATALOG NUMBER: TWP LED 10C 700 50K T3M

FILENAME: TWP_LED_10C_700_50K_T3M.IES

IESNA:LM-63-2002
[TEST] LTL22761P4
[TESTDATE] 12/7/2012
[ISSUEDATE] 2/11/2013
[TESTLAB] SCALED PHOTOMETRY
[TESTMETHOD] IES LM- 79-08
[MANUFAC] Lithonia Lighting
[LUMCAT] TWP LED 10C 700 50K T3M
[LUMINAIRE] TWP LED, 10 LED'S, 700mA DRIVER, 5000K CCT, TYPE 3 OPTIC
[LAMPCAT] NICHIA 219B 5000K
[LAMP] LED
[BALLAST] LEDINTA0700C210DO
[BALLASTCAT]
[DISTRIBUTION] TYPE IV, MEDIUM, BUG RATING: B0 - U3 - G2
[_TOTALLUMINAIRELUMENS] 1614.2
[_LAMPPOSITION] 0 , 0
[_LAMPWATTAGE] 26
[_MOUNTING] Wall
[_FAMILY] TWP LED
[_PRODUCTID] 8af4d28c-949a-4d6f-b3c1-fced365f693d

SUMMARY DATA

EFFICIENCY (Total):	- 161410.9 %
EFFICIENCY (Down / Up):	- 138822.2 % / - 22588.7 %
EFFICIENCY (Street / House):	0.0 % / 0.0 %
LUMENS/LAMP:	-1
NO. OF LAMPS:	1
LUMINOUS OPENING:	RECTANGULAR
Width:	0.38 (Feet)
Length:	1.13
Height:	0.50
INPUT WATTS:	26

PLANE & CONE DIAGRAM

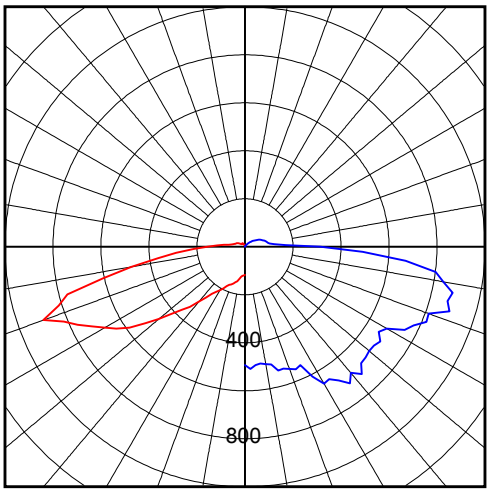

MAX CANDLEPOWER: 893.504

Max plane at H = 72.5 Max cone at V = 70

ISO-ILLUMINANCE DIAGRAM

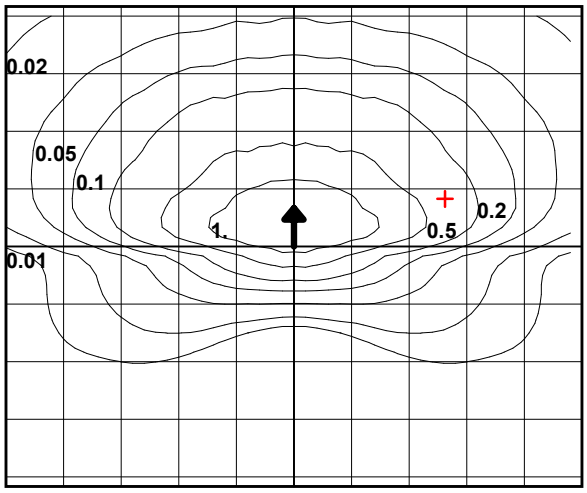

Mounting Height = 10 Feet. Each box represents one mounting height.

Mounting Height	Multiplier
10	1.000
15	0.444
20	0.250
25	0.160
30	0.111
35	0.082
40	0.063
45	0.049
50	0.040

+ = Point of max candela

Photometric Report

CATALOG NUMBER: TWP LED 10C 700 50K T3M

FILENAME: TWP_LED_10C_700_50K_T3M.IES

CANDELA TABLE

Vertical	Horizontal Angles											
Angle	0	2.5	5	7.5	10	12.5	15	17.5	20	22.5	25	27.5
0	117	117	117	117	117	117	117	117	117	117	117	117
2.5	126	130	130	129	129	128	128	128	128	128	128	128
5	142	149	148	147	147	147	148	149	149	148	146	144
7.5	164	167	166	166	168	170	171	169	166	161	159	158
10	175	173	174	176	177	177	173	169	168	169	168	166
12.5	178	179	181	183	182	177	173	173	171	169	169	169
15	189	193	196	196	191	186	184	181	179	177	176	175
17.5	205	210	212	208	203	199	194	192	191	188	188	191
20	224	230	231	223	218	212	210	208	205	206	209	211
22.5	232	235	233	227	222	219	216	218	220	226	229	232
25	240	242	237	233	227	225	226	225	232	236	240	244
27.5	244	244	239	238	230	230	232	236	244	247	249	248
30	248	246	244	241	234	234	237	244	245	248	248	252
32.5	252	255	252	248	242	243	247	250	251	251	255	254
35	271	277	275	267	265	265	266	266	265	265	266	269
37.5	303	307	306	297	297	297	294	293	290	291	292	294
40	321	327	326	318	319	317	318	315	317	321	325	318
42.5	338	342	340	332	337	332	335	334	336	342	346	341
45	354	360	356	349	353	348	350	350	357	361	356	354
47.5	364	366	366	364	365	366	364	367	369	378	368	362
50	360	358	361	367	360	368	369	375	379	382	379	378
52.5	364	366	370	377	364	378	381	386	390	391	388	389
55	379	379	383	389	375	391	396	401	410	409	407	408
57.5	381	385	391	394	384	394	405	415	422	422	423	433
60	397	408	412	416	408	410	426	434	433	431	433	447
62.5	446	479	472	477	461	455	473	474	470	464	456	478
65	536	563	544	548	537	530	550	547	553	543	517	548
67.5	537	551	537	538	540	541	573	573	578	586	556	619
70	492	510	495	491	496	502	534	532	542	553	544	610
72.5	447	451	436	430	439	456	483	481	485	494	503	548
75	365	360	348	342	349	373	393	388	394	401	425	459
77.5	299	311	289	291	290	314	323	318	316	318	337	360
80	278	297	269	275	271	293	297	290	285	278	287	295
82.5	274	287	259	264	263	286	287	280	273	263	268	270
85	251	259	233	242	241	269	265	262	257	249	253	256
87.5	224	225	202	216	211	243	233	233	230	227	235	238
90	194	191	174	189	183	212	196	199	198	203	208	214
92.5	167	163	150	164	158	184	165	171	169	177	181	187
95	144	138	129	141	135	158	139	148	144	152	156	161
97.5	121	115	109	118	114	132	118	126	123	130	134	138
100	102	96	92	98	96	110	100	107	105	112	114	117
102.5	85	81	79	83	82	91	86	90	90	96	97	100
105	73	69	68	71	71	76	74	77	77	83	83	86
107.5	64	61	61	63	63	66	66	68	68	73	73	75
110	58	56	56	57	57	60	60	60	61	65	66	68
112.5	54	52	52	53	53	54	55	56	57	59	60	61
115	50	48	48	49	49	50	51	52	52	54	54	56
117.5	45	44	44	45	45	46	47	48	49	50	51	52
120	42	41	41	42	42	43	44	46	47	48	49	50
122.5	40	40	40	41	42	43	44	45	46	48	49	50
125	41	41	41	42	42	43	45	46	47	49	49	50
127.5	41	41	41	42	42	43	45	46	47	49	49	50
130	40	40	40	41	41	42	43	45	46	47	48	49
132.5	39	39	40	40	40	41	42	43	45	46	46	47
135	38	38	38	38	39	40	40	42	43	44	44	45
137.5	36	35	36	36	37	38	38	39	40	41	41	42
140	34	32	33	34	34	35	35	35	36	37	38	38
142.5	31	29	30	30	31	31	32	32	32	33	33	34
145	27	26	26	27	28	28	28	28	29	29	29	29
147.5	23	22	23	23	24	24	24	24	24	24	24	24
150	18	17	17	18	18	19	20	19	19	19	18	18
152.5	12	11	11	12	13	13	13	13	13	12	10	10
155	5	3	3	4	4	4	5	6	7	8	8	9
157.5	0	0	1	1	3	4	4	5	6	7	7	8
160	0	0	1	1	2	3	4	4	5	6	6	7
162.5	0	0	0	1	1	2	3	4	4	5	5	6
165	0	0	0	0	1	1	1	3	3	4	4	4
167.5	0	0	0	0	0	1	1	1	2	3	3	4
170	0	0	0	0	0	1	1	1	1	1	2	3
172.5	0	0	0	0	0	1	1	1	1	1	1	1
175	0	0	0	0	0	0	1	1	1	1	1	1
177.5	0	0	0	0	0	1	1	1	1	1	1	1
180	1	1	1	1	1	1	1	1	1	1	1	1

Vertical	Horizontal Angles											
Angle	30	32.5	35	37.5	40	42.5	45	47.5	50	52.5	55	57.5
0	117	117	117	117	117	117	117	117	117	117	117	117
2.5	128	128	127	127	127	127	126	126	125	124	124	124
5	142	140	139	137	135	134	133	131	130	129	127	127
7.5	157	155	154	152	149	148	146	144	142	140	137	135
10	165	164	163	162	160	159	158	157	157	155	153	151
12.5	168	167	168	169	170	171	171	171	173	173	171	169
15	177	177	177	178	180	182	183	184	185	185	183	181
17.5	192	193	193	194	196	195	192	188	187	185	183	181
20	212	213	213	210	208	201	196	192	189	187	188	187
22.5	236	233	229	222	213	208	206	207	200	195	193	190
25	244	241	235	230	231	230	223	216	210	209	204	199
27.5	248	243	247	247	244	238	233	230	226	219	213	209
30	251	258	256	253	250	247	242	240	237	236	233	229
32.5	261	260	258	255	252	250	251	256	259	258	258	255
35	269	265	260	255	254	260	267	274	278	284	280	278
37.5	287	278	269	266	269	277	286	293	296	296	301	298
40	311	298	293	291	296	300	302	305	309	312	311	314
42.5	331	322	325	326	329	329	328	322	322	323	328	327
45	349	347	356	360	365	360	355	350	347	345	349	358
47.5	367	372	382	388	395	384	385	385	382	390	391	392
50	386	398	406	410	414	408	417	422	422	431	426	421
52.5	399	420	425	429	429	436	447	458	465	464	459	456
55	428	442	447	454	454	466	482	495	495	500	496	496
57.5	459	469	474	483	485	497	514	526	526	528	524	531
60	479	496	497	510	517	530	551	548	548	552	553	575
62.5	510	523	536	540	549	558	577	566	566	570	583	612
65	575	573	596	586	588	597	604	594	585	585	597	614
67.5	657	646	667	668	640	662	637	620	625	624	631	630
70	659	653	680	717	686	719	685	682	676	676	687	661
72.5	593	596	629	655	656	679	673	695	701	702	711	705
75	498	507	545	552	573	585	601	647	667	673	693	677
77.5	385	397	432	440	462	478	507	544	567	589	589	600
80	306	315	334	343	360	371	401	432	450	468	471	488
82.5	275	278	278	281	286	289	308	326	340	348	358	374
85	260	261	255	255	252	246	254	257	264	263	270	281
87.5	243	245	238	237	231	223	223	218	219	212	215	218
90	221	224	219	217	213	202	202	193	191	182	176	177
92.5	194	198	198	196	196	183	183	173	170	160	150	146
95	168	173	177	172	177	164	165	155	152	142	131	125
97.5	144	147	154	149	157	145	148	139	134	126	115	107
100	123	124	132	128	134	126	127	121	116	110	100	91
102.5	104	105	112	109	112	108	107	104	98	93	85	78
105	88	89	94	92	93	92	90	88	82	79	73	67
107.5	77	77	81	79	79	79	75	74	70	66	63	59
110	68	68	70	69	68	67	64	63	60	58	56	54
112.5	61	61	61	61	60	59	57	56	54	53	52	51
115	56	56	56	55	54	54	53	53	52	51	50	49
117.5	53	53	53	53	53	53	52	52	51	50	49	47
120	51	52	52	53	53	53	52	51	50	49	47	46
122.5	51	52	53	54	54	54	53	52	50	48	46	44
125	52	53	53	54	54	54	53	52	50	47	45	42
127.5	51	52	53	53	54	53	52	51	49	47	43	40
130	50	51	52	52	52	51	50	49	47	45	43	39
132.5	48	49	49	49	49	48	47	46	45	43	40	36
135	46	46	46	46	46	46	44	43	41	39	36	32
137.5	42	43	43	43	43	42	42	40	38	35	31	25
140	38	39	39	39	39	38	36	35	32	29	24	21
142.5	34	34	34	33	33	32	31	29	25	21	20	20
145	29	28	28	27	26	25	23	19	19	19	20	20
147.5	24	22	21	20	18	15	15	15	16	17	18	18
150	18	15	13	12	12	12	13	13	14	15	15	15
152.5	10	10	11	11	12	12	12	12	12	13	13	13
155	10	10	10	11	11	12	12	12	12	12	12	12
157.5	9	9	10	10	10	10	11	11	11	11	11	11
160	7	8	8	9	10	10	10	10	10	10	10	10
162.5	6	7	7	7	8	8	8	9	9	9	9	9
165	5	5	6	6	6	7	7	7	7	7	7	7
167.5	4	4	4	4	5	5	5	5	5	5	5	5
170	3	4	4	4	4	4	4	4	4	4	4	4
172.5	1	2	2	2	2	3	3	3	3	3	3	3
175	1	1	1	1	1	1	1	1	1	1	1	1
177.5	1	1	1	1	1	1	1	1	1	1	1	1
180	1	1	1	1	1	1	1	1	1	1	1	1

Vertical	Horizontal Angles											
Angle	60	62.5	65	67.5	70	72.5	75	77.5	80	82.5	85	87.5
0	117	117	117	117	117	117	117	117	117	117	117	117
2.5	123	123	122	121	121	120	119	118	118	118	117	116
5	125	124	124	123	122	121	121	120	118	118	116	116
7.5	133	132	130	128	127	126	125	124	122	121	120	118
10	148	145	142	140	137	135	133	131	130	128	127	124
12.5	167	163	160	155	151	147	143	140	137	134	132	130
15	177	172	169	164	158	152	147	142	139	135	133	131
17.5	178	177	174	171	167	160	153	147	141	138	135	131
20	183	180	177	176	172	167	160	153	146	141	137	133
22.5	190	187	184	181	177	171	166	158	150	144	139	135
25	193	191	188	186	184	181	176	169	160	153	148	144
27.5	207	203	201	198	197	195	191	183	174	165	160	155
30	226	224	218	215	211	209	205	198	188	178	171	166
32.5	250	244	240	233	228	223	219	208	197	187	178	171
35	274	267	256	249	244	239	234	224	212	203	195	187
37.5	293	287	280	274	272	266	259	248	237	227	218	207
40	312	310	309	307	305	300	291	279	265	251	241	224
42.5	333	339	343	350	347	339	326	311	294	276	256	237
45	371	379	389	392	387	371	354	336	316	299	279	258
47.5	398	411	422	434	422	415	395	376	355	337	311	288
50	422	435	450	471	471	469	449	431	417	386	360	317
52.5	461	470	489	514	518	523	508	491	475	444	408	353
55	498	513	528	551	574	587	583	560	546	503	447	371
57.5	539	556	577	584	621	636	631	613	588	545	484	392
60	587	595	609	628	657	673	674	669	657	608	538	422
62.5	609	635	648	681	703	718	726	714	706	677	585	470
65	629	654	703	733	772	770	802	772	784	734	644	500
67.5	680	682	737	771	827	816	849	859	855	811	687	512
70	682	749	775	818	815	894	873	887	840	802	671	490
72.5	702	730	776	796	811	814	834	837	801	729	620	436
75	707	703	719	726	753	765	726	721	701	617	504	343
77.5	620	640	645	651	637	606	593	558	528	461	366	237
80	506	545	527	528	508	481	452	428	393	344	263	171
82.5	395	411	406	408	386	366	348	332	298	244	185	120
85	300	307	306	302	294	287	269	239	213	171	130	91
87.5	227	230	232	230	224	214	196	176	152	121	92	67
90	180	181	180	175	169	157	141	123	105	83	63	48
92.5	145	144	141	134	127	117	102	88	72	57	46	39
95	120	116	113	106	98	88	77	66	56	46	40	38
97.5	102	96	91	85	77	69	61	54	46	41	38	37
100	86	80	74	69	63	57	50	46	41	38	36	37
102.5	73	68	63	59	54	49	45	41	38	35	35	37
105	63	60	56	53	49	45	41	38	35	34	35	38
107.5	56	54	52	49	46	42	39	36	34	33	35	38
110	52	50	48	46	43	40	36	34	32	33	35	39
112.5	49	47	46	43	40	38	34	32	31	32	35	38
115	47	46	43	41	38	35	31	29	29	31	34	37
117.5	46	44	42	39	36	32	28	26	28	30	32	36
120	44	42	39	36	32	26	24	24	26	28	31	33
122.5	41	39	36	32	26	22	21	22	24	26	29	31
125	39	36	32	27	22	18	19	21	22	24	26	28
127.5	37	33	28	22	18	17	18	19	21	22	24	25
130	35	29	22	18	16	17	18	18	19	20	21	22
132.5	32	25	19	17	17	17	17	18	18	18	18	20
135	26	21	18	18	18	17	17	17	17	17	17	17
137.5	21	20	19	19	18	18	18	18	17	16	16	16
140	20	20	19	19	18	18	18	18	17	16	15	15
142.5	20	20	20	19	19	18	18	17	16	15	14	14
145	20	19	19	19	19	18	17	16	15	14	14	13
147.5	18	18	18	18	18	17	16	15	14	13	13	12
150	16	16	16	16	15	15	14	14	13	12	11	11
152.5	13	13	13	13	13	13	12	11	10	10	10	9
155	12	12	11	11	11	10	10	9	9	8	8	8
157.5	11	10	10	10	10	9	8	8	7	7	7	7
160	10	10	9	9	8	8	8	7	7	7	7	6
162.5	8	8	8	8	7	7	7	7	7	6	6	6
165	7	7	7	7	6	6	6	6	6	5	5	5
167.5	5	5	5	5	5	4	4	4	4	4	4	4
170	4	4	4	4	4	4	4	4	4	4	3	3
172.5	3	3	3	3	3	3	3	3	3	2	2	3
175	1	1	1	1	1	1	1	1	1	1	1	1
177.5	1	1	1	1	1	1	1	1	1	1	1	1
180	1	1	1	1	1	1	1	1	1	1	1	1

Vertical	Horizontal Angles											
Angle	90	92.5	95	97.5	100	102.5	105	107.5	110	112.5	115	117.5
0	117	117	117	117	117	117	117	117	117	117	117	117
2.5	116	116	116	115	115	115	115	115	115	114	114	114
5	115	114	114	113	113	113	113	112	112	111	110	110
7.5	117	116	116	115	114	114	113	112	111	110	110	109
10	123	121	120	120	118	117	116	115	113	112	110	108
12.5	127	126	124	123	122	120	119	117	115	113	110	109
15	128	126	125	124	122	120	118	116	113	111	109	106
17.5	129	127	125	124	122	119	117	114	111	109	106	104
20	131	128	127	124	122	118	116	112	109	106	103	101
22.5	132	130	127	124	121	117	114	110	107	104	100	96
25	140	137	134	130	126	121	117	113	109	104	98	93
27.5	149	146	141	132	127	122	117	113	107	102	96	91
30	157	149	144	137	128	122	116	109	103	98	92	86
32.5	164	155	147	138	130	121	112	105	98	92	87	81
35	176	166	154	139	128	118	111	103	96	89	81	75
37.5	194	176	158	139	127	115	107	99	91	85	77	72
40	205	184	161	141	127	114	105	95	85	79	73	68
42.5	213	189	162	141	125	113	102	91	82	75	69	64
45	229	198	162	138	124	111	99	89	80	73	67	62
47.5	247	203	160	135	120	109	97	87	79	72	66	60
50	265	205	158	131	116	104	94	85	78	71	65	57
52.5	283	210	157	128	115	104	93	84	77	70	62	54
55	286	204	149	123	111	100	91	82	75	68	61	54
57.5	286	195	140	117	105	95	88	81	73	66	60	53
60	300	197	138	116	107	96	87	78	71	66	59	52
62.5	320	198	136	113	103	93	86	79	73	66	59	53
65	325	191	133	111	102	93	86	80	73	67	60	55
67.5	329	182	127	107	100	93	89	83	77	70	64	59
70	315	170	121	104	97	93	90	85	79	75	70	65
72.5	272	148	113	98	95	93	89	85	81	77	72	67
75	208	116	98	92	92	91	91	89	86	82	77	69
77.5	155	96	88	86	89	91	92	92	90	87	82	74
80	119	84	79	79	82	85	87	89	90	87	84	78
82.5	90	73	71	73	77	82	86	88	88	87	83	78
85	70	61	62	68	74	81	85	88	88	87	83	77
87.5	54	52	55	63	70	76	82	88	90	89	86	81
90	43	46	51	58	66	74	80	85	88	88	87	84
92.5	40	43	49	55	63	69	74	79	82	83	82	80
95	40	42	47	52	58	64	68	74	75	77	77	74
97.5	39	40	43	47	52	58	63	68	70	71	71	70
100	39	40	43	44	49	52	57	61	63	65	65	64
102.5	40	40	42	43	46	49	52	55	57	58	59	59
105	40	40	41	41	43	46	49	50	51	52	52	52
107.5	40	41	41	40	41	43	44	45	46	46	47	46
110	41	41	40	39	39	40	40	40	41	41	41	40
112.5	41	41	39	38	37	37	37	37	37	37	36	35
115	39	39	38	35	35	35	35	34	34	33	32	31
117.5	38	38	36	34	32	32	32	32	32	31	29	28
120	35	35	34	32	31	30	30	29	29	27	26	25
122.5	32	33	31	29	28	28	27	26	25	24	23	22
125	30	30	29	26	25	25	24	24	22	21	21	19
127.5	26	26	25	24	22	21	21	20	20	19	18	17
130	23	23	22	20	19	18	18	18	17	17	16	15
132.5	20	20	19	18	17	16	16	15	15	15	15	14
135	18	18	17	16	15	15	15	15	14	14	13	13
137.5	16	16	15	15	14	14	13	13	13	13	12	12
140	15	15	14	14	13	13	13	12	12	11	11	11
142.5	14	14	13	13	13	12	11	11	11	11	10	10
145	13	13	13	12	12	11	11	10	10	10	10	10
147.5	12	12	11	11	11	10	10	10	10	9	9	9
150	10	10	10	10	10	10	9	9	8	8	8	7
152.5	9	9	8	8	8	8	7	7	7	7	7	7
155	8	7	7	7	7	7	7	6	6	6	6	5
157.5	7	7	6	6	6	6	6	6	5	5	5	5
160	6	6	6	6	6	6	5	5	5	5	5	5
162.5	6	6	6	5	5	5	5	5	5	4	4	4
165	5	5	4	4	4	4	4	4	4	4	4	4
167.5	4	4	4	4	4	4	4	4	3	3	3	3
170	3	3	3	3	3	3	3	3	3	3	3	3
172.5	2	2	2	2	2	2	2	2	2	2	2	2
175	1	1	1	1	1	1	1	1	1	1	1	1
177.5	1	1	1	1	1	1	1	1	1	1	1	1
180	1	1	1	1	1	1	1	1	1	1	1	1

Vertical	Horizontal Angles											
Angle	120	122.5	125	127.5	130	132.5	135	137.5	140	142.5	145	147.5
0	117	117	117	117	117	117	117	117	117	117	117	117
2.5	114	114	114	114	114	113	113	113	113	113	113	113
5	110	110	109	109	109	109	109	109	109	109	108	107
7.5	108	107	106	105	105	104	103	102	102	102	101	100
10	107	105	104	103	102	100	99	98	97	96	96	95
12.5	107	105	102	101	99	98	96	95	93	92	91	90
15	104	102	101	99	97	95	93	91	90	89	87	85
17.5	102	99	97	95	93	91	89	87	85	82	80	78
20	98	95	92	90	88	85	82	79	77	74	72	70
22.5	93	90	87	84	80	77	74	72	70	68	66	64
25	89	85	80	77	73	70	68	66	64	63	62	61
27.5	85	81	76	72	68	66	64	62	61	59	58	57
30	80	75	71	68	66	63	60	58	56	53	51	49
32.5	75	71	67	64	62	59	56	53	49	46	42	38
35	70	66	63	60	57	53	50	46	41	36	33	30
37.5	68	63	59	55	52	47	43	39	35	31	28	26
40	63	59	54	50	45	40	36	33	30	27	25	24
42.5	60	54	49	44	39	36	32	29	27	25	24	23
45	56	50	45	40	36	33	31	28	26	24	23	22
47.5	53	47	42	38	35	32	29	27	25	24	22	21
50	50	45	41	38	34	31	28	26	24	22	20	18
52.5	49	44	40	37	34	30	27	24	21	20	18	16
55	49	44	40	37	32	29	26	22	20	18	15	14
57.5	48	43	40	36	31	27	24	21	18	15	14	12
60	48	43	39	35	30	26	22	19	17	14	12	10
62.5	48	43	40	35	30	26	22	18	15	13	11	8
65	50	46	40	36	31	26	22	18	15	12	10	7
67.5	54	49	43	38	32	27	23	18	15	11	9	7
70	58	51	45	39	34	28	23	18	15	12	9	7
72.5	60	54	47	41	35	29	24	20	16	13	10	7
75	63	56	50	43	38	31	26	21	17	14	11	8
77.5	67	60	54	47	39	32	27	22	18	14	11	8
80	71	66	58	50	42	35	29	24	19	15	12	9
82.5	73	68	61	52	44	37	30	25	20	16	13	10
85	74	68	60	52	44	37	31	26	21	17	13	10
87.5	76	69	60	52	43	37	31	26	21	17	13	10
90	79	72	63	54	45	38	31	25	21	16	13	10
92.5	78	72	64	54	46	39	32	26	21	16	13	10
95	72	67	60	53	46	40	34	28	22	17	13	10
97.5	68	63	56	49	44	38	33	27	22	18	13	10
100	63	58	52	47	41	36	31	26	21	17	13	10
102.5	57	53	49	43	39	34	29	24	20	16	13	10
105	50	47	43	40	36	32	27	23	19	15	12	10
107.5	44	41	38	36	32	29	25	21	18	15	12	10
110	39	36	34	31	28	25	22	19	16	13	11	9
112.5	34	32	30	28	25	22	19	17	14	12	10	8
115	29	27	26	24	22	20	18	15	13	11	10	8
117.5	26	24	22	21	19	17	15	14	12	10	9	8
120	23	21	20	18	17	15	14	13	11	10	8	7
122.5	20	19	17	16	15	14	13	11	10	9	8	7
125	18	17	15	15	14	13	11	10	10	8	7	6
127.5	16	15	15	14	13	12	10	10	9	7	7	6
130	15	14	13	13	11	10	10	8	8	7	6	5
132.5	14	13	12	11	10	10	9	8	7	7	6	5
135	12	12	11	10	10	9	8	7	7	7	6	5
137.5	11	11	10	10	9	9	8	7	7	6	6	5
140	10	10	10	9	9	8	7	7	7	6	5	4
142.5	10	10	9	9	8	7	7	7	6	6	5	4
145	9	9	8	8	7	7	7	6	6	5	4	4
147.5	8	8	8	7	7	7	6	6	5	4	4	3
150	7	7	7	6	6	6	5	4	4	4	3	3
152.5	6	6	6	5	5	4	4	4	4	3	3	3
155	5	5	5	5	5	4	4	4	4	4	3	3
157.5	5	5	5	4	4	4	4	4	4	3	3	2
160	4	4	4	4	4	4	4	3	3	3	2	2
162.5	4	4	4	4	4	4	3	3	3	3	2	2
165	4	4	3	3	3	3	3	2	2	2	1	1
167.5	3	3	3	3	2	2	2	2	2	1	1	1
170	2	2	2	2	2	2	2	1	1	1	1	1
172.5	2	1	1	1	1	1	1	1	1	1	1	1
175	1	1	1	1	1	1	1	1	1	1	1	1
177.5	1	1	1	1	1	1	1	1	1	1	1	1
180	1	1	1	1	1	1	1	1	1	1	1	1

Vertical	Horizontal Angles											
Angle	150	152.5	155	157.5	160	162.5	165	167.5	170	172.5	175	177.5
0	117	117	117	117	117	117	117	117	117	117	117	117
2.5	113	113	113	113	112	112	112	112	112	112	112	111
5	107	107	107	106	106	106	105	105	105	105	105	105
7.5	100	100	100	100	99	99	99	99	98	98	98	98
10	94	93	93	93	93	93	92	92	92	91	91	91
12.5	89	88	88	87	86	86	86	85	85	85	85	85
15	84	83	81	80	79	78	77	77	77	76	76	75
17.5	76	74	72	71	69	68	68	67	66	66	66	66
20	68	66	65	63	63	61	60	60	60	59	59	58
22.5	63	61	60	59	58	57	57	57	56	55	54	54
25	60	58	57	55	54	53	52	52	51	50	49	48
27.5	55	53	51	48	46	45	43	43	41	40	38	38
30	46	43	40	37	35	32	31	29	28	27	26	26
32.5	35	32	30	28	26	24	24	23	22	22	21	21
35	28	26	24	24	23	22	21	21	21	20	20	20
37.5	25	24	23	22	22	21	21	21	21	21	21	21
40	24	23	22	22	21	21	21	21	21	20	20	20
42.5	22	22	21	21	20	20	18	18	17	17	16	16
45	21	21	19	18	17	17	15	15	14	14	14	13
47.5	19	18	17	15	14	14	13	12	11	11	11	11
50	17	15	14	13	12	11	10	10	9	8	8	8
52.5	14	13	12	10	10	8	7	7	7	6	6	6
55	12	11	10	8	7	7	6	5	5	4	4	4
57.5	10	9	7	6	6	4	4	3	3	3	3	3
60	8	7	6	4	4	3	2	2	1	1	1	1
62.5	7	6	4	3	2	1	1	1	1	1	1	1
65	6	4	3	2	1	1	0	0	0	0	0	0
67.5	5	4	2	1	1	0	0	0	0	0	0	0
70	5	4	3	1	1	0	0	0	0	0	0	0
72.5	6	4	3	2	1	0	0	0	0	0	0	0
75	6	4	3	2	1	1	0	0	0	0	0	0
77.5	6	4	3	2	1	1	0	0	0	0	0	0
80	7	5	4	3	1	1	0	0	0	0	0	0
82.5	7	5	4	3	2	1	1	1	0	0	0	0
85	7	6	4	3	2	1	1	1	1	0	0	0
87.5	7	6	4	3	2	1	1	1	1	1	1	1
90	7	6	4	3	2	1	1	1	1	1	1	1
92.5	7	6	4	4	2	1	1	1	1	1	1	1
95	8	6	5	4	2	1	1	1	1	1	1	1
97.5	8	7	5	4	3	1	1	1	1	1	1	1
100	8	7	5	4	3	1	1	1	1	1	1	1
102.5	8	7	5	4	3	1	1	1	1	1	1	1
105	8	6	5	4	2	1	1	1	1	1	1	1
107.5	8	6	5	4	2	1	1	1	1	1	1	1
110	7	6	4	3	2	1	1	1	1	1	0	1
112.5	7	6	4	3	2	1	1	1	1	1	0	0
115	7	6	4	3	2	1	1	1	1	0	0	0
117.5	7	5	4	3	2	1	1	1	1	1	0	0
120	6	5	4	3	2	1	1	1	1	0	0	0
122.5	6	4	4	2	1	1	1	1	0	0	0	0
125	5	4	3	2	1	1	1	1	0	0	0	0
127.5	5	4	3	2	1	1	1	1	0	0	0	0
130	4	4	3	2	1	1	1	0	0	0	0	0
132.5	4	4	3	2	1	1	1	1	0	0	0	0
135	4	4	3	2	1	1	1	0	0	0	0	0
137.5	4	3	3	1	1	1	1	1	0	0	0	0
140	4	3	2	1	1	1	0	0	0	0	0	0
142.5	4	3	2	1	1	1	1	0	0	0	0	0
145	3	2	2	1	1	1	1	0	0	0	0	0
147.5	3	2	2	1	1	1	1	1	0	0	0	0
150	2	2	1	1	1	1	1	0	0	0	0	0
152.5	2	2	1	1	1	1	0	0	0	0	0	0
155	2	2	1	1	1	1	1	0	0	0	0	0
157.5	2	1	1	1	1	1	0	0	0	0	0	0
160	1	1	1	1	1	1	1	1	0	0	0	0
162.5	1	1	1	1	1	1	1	1	0	0	0	0
165	1	1	1	1	1	1	1	0	0	0	0	0
167.5	1	1	1	1	1	1	1	0	0	0	0	0
170	1	1	1	1	1	1	1	0	0	0	0	0
172.5	1	1	1	1	1	1	1	1	0	0	0	0
175	1	1	1	1	1	1	1	0	0	0	0	0
177.5	1	1	1	1	1	1	1	0	0	0	0	0
180	1	1	1	1	1	1	1	1	1	1	1	1

Vertical Angle	Horizontal Angles 180
0	117
2.5	110
5	103
7.5	96
10	89
12.5	83
15	72
17.5	62
20	57
22.5	53
25	46
27.5	34
30	24
32.5	21
35	21
37.5	21
40	20
42.5	16
45	13
47.5	11
50	8
52.5	6
55	4
57.5	3
60	2
62.5	1
65	0
67.5	0
70	0
72.5	0
75	0
77.5	0
80	0
82.5	0
85	1
87.5	0
90	0
92.5	1
95	0
97.5	1
100	1
102.5	1
105	0
107.5	0
110	0
112.5	0
115	0
117.5	0
120	0
122.5	0
125	0
127.5	0
130	0
132.5	0
135	0
137.5	0
140	0
142.5	0
145	0
147.5	0
150	0
152.5	0
155	0
157.5	0
160	0
162.5	0
165	0
167.5	0
170	0
172.5	0
175	0
177.5	0
180	1

Photometric Report

CATALOG NUMBER: TWP LED 20C 700 50K T3M MVOLT

FILENAME: TWP_LED_20C_700_50K_T3M_MVOLT.IES

IESNA:LM-63-2002
[TEST] LTL28590P8
[TESTDATE] 8/3/2015
[ISSUEDATE] 11/30/2015
[TESTLAB] SCALED PHOTOMETRY
[TESTMETHOD]
[MANUFAC] Lithonia Lighting
[LUMCAT] TWP LED 20C 700 50K T3M MVOLT
[LUMINAIRE] TWP LED WITH 20 LEDs, @700mA, 5000K AND TYPE 3 MEDIUM OPTICS
[LAMPCAT]
[LAMP] LED
[BALLAST] LED DRIVER
[BALLASTCAT]
[DISTRIBUTION] TYPE IV, MEDIUM, BUG RATING: B1 - U3 - G3
[_TOTALLUMINAIRELUMENS] 4232.9
[_LAMPPOSITION] 0 , 0
[_LAMPWATTAGE] 45
[_MOUNTING]
[_FAMILY] TWP LED
[_PRODUCTID] adeab800-2fc1-4ced-b90c-37d82ece9554
[_CCT] 5000K
[_CRI] 70

SUMMARY DATA

EFFICIENCY (Total):	- 423265.6 %
EFFICIENCY (Down / Up):	- 366592.0 % / - 56673.6 %
EFFICIENCY (Street / House):	0.0 % / 0.0 %
LUMENS/LAMP:	-1
NO. OF LAMPS:	1
LUMINOUS OPENING:	RECTANGULAR
Width:	1.13 (Feet)
Length:	0.38
Height:	0.50
INPUT WATTS:	45

PLANE & CONE DIAGRAM

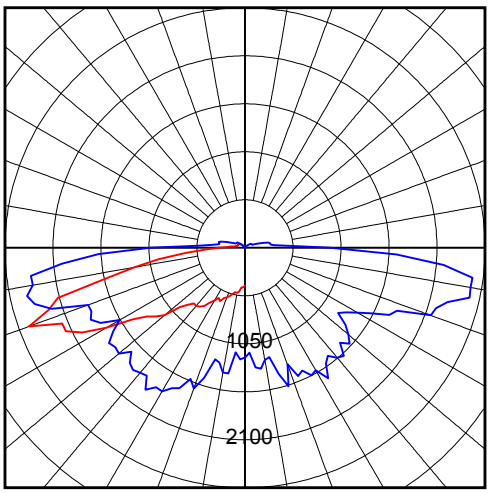

MAX CANDLEPOWER: 2516.685

Max plane at H = 77.5 Max cone at V = 70

ISO-ILLUMINANCE DIAGRAM

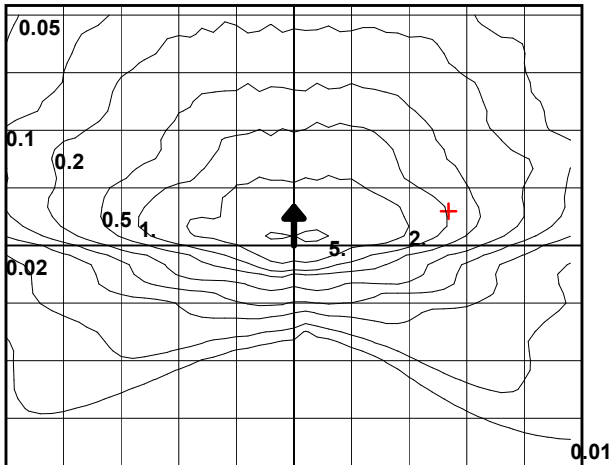

Mounting Height = 10 Feet. Each box represents one mounting height.

Mounting Height	Multiplier
10	1.000
15	0.444
20	0.250
25	0.160
30	0.111
35	0.082
40	0.063
45	0.049
50	0.040

+ = Point of max candela

Photometric Report

CATALOG NUMBER: TWP LED 20C 700 50K T3M MVOLT

FILENAME: TWP_LED_20C_700_50K_T3M_MVOLT.IES

CANDELA TABLE

Vertical	Horizontal Angles											
Angle	0	2.5	5	7.5	10	12.5	15	17.5	20	22.5	25	27.5
0	413	413	413	413	413	413	413	413	413	413	413	413
2.5	432	434	436	440	444	448	452	456	458	460	463	463
5	456	461	469	477	481	483	485	487	489	491	492	494
7.5	494	506	520	525	529	535	543	549	551	543	527	512
10	522	539	555	560	570	578	582	566	547	533	531	535
12.5	533	555	570	582	601	607	576	558	562	566	566	576
15	502	525	537	556	560	543	533	541	543	556	568	591
17.5	467	485	494	504	496	489	506	512	524	545	560	562
20	446	454	458	461	450	456	465	469	491	502	506	524
22.5	450	450	452	450	448	463	458	475	473	481	489	479
25	436	438	444	436	446	454	456	461	469	479	475	485
27.5	438	440	438	428	444	448	456	460	467	460	473	500
30	461	471	456	452	475	467	471	483	475	473	492	498
32.5	502	510	485	494	506	510	506	506	498	518	522	535
35	566	564	551	572	568	578	584	564	562	562	574	587
37.5	619	599	607	630	626	636	640	615	619	634	665	667
40	642	622	634	667	663	682	681	659	681	706	721	754
42.5	628	620	619	640	686	677	651	657	698	754	789	803
45	648	646	632	665	712	682	653	671	712	760	803	818
47.5	640	648	632	667	710	700	669	702	748	793	814	851
50	646	659	640	679	708	698	682	727	779	814	838	869
52.5	661	700	665	731	733	714	706	746	789	801	865	927
55	694	731	702	760	746	719	729	801	838	843	921	952
57.5	772	793	776	843	809	766	807	871	907	898	975	956
60	989	977	1006	1084	979	898	971	1012	991	952	1055	1004
62.5	1076	1039	1121	1241	1105	1043	1216	1243	1251	1167	1311	1156
65	1090	1049	1156	1247	1121	1076	1225	1284	1233	1241	1382	1373
67.5	1152	1099	1251	1311	1190	1173	1344	1468	1305	1365	1390	1406
70	1202	1148	1313	1334	1249	1225	1427	1588	1357	1518	1483	1574
72.5	1159	1068	1280	1268	1173	1187	1406	1580	1380	1555	1460	1600
75	1190	1086	1299	1282	1148	1194	1384	1472	1295	1483	1371	1454
77.5	1049	973	1190	1173	1076	1208	1375	1481	1309	1559	1429	1485
80	814	768	907	892	830	936	1039	1101	1026	1161	1159	1196
82.5	702	684	779	776	719	830	880	915	882	950	966	987
85	648	626	715	717	651	743	754	758	768	805	801	845
87.5	603	580	679	679	617	700	696	692	696	694	673	737
90	533	518	605	611	553	646	640	640	659	640	597	638
92.5	469	461	539	545	494	576	568	570	589	587	537	582
95	407	399	471	473	428	504	506	512	520	524	467	514
97.5	345	339	397	405	370	434	432	446	446	465	409	450
100	281	281	324	333	310	361	359	376	378	399	347	386
102.5	229	229	256	268	254	289	293	308	312	339	291	324
105	188	188	204	215	209	235	238	250	250	277	244	266
107.5	157	159	167	175	173	190	196	207	209	233	207	217
110	138	140	145	149	149	159	165	175	176	192	182	180
112.5	124	126	130	134	134	138	143	149	151	159	159	157
115	114	114	116	120	120	122	126	128	130	136	136	136
117.5	105	107	109	109	109	111	112	114	116	120	122	122
120	97	97	99	101	101	101	103	105	107	111	112	114
122.5	89	91	93	93	95	97	97	101	101	105	107	109
125	87	87	91	91	91	93	95	99	101	101	103	107
127.5	85	85	89	89	89	91	93	95	97	99	99	103
130	81	81	85	87	85	87	89	91	93	95	95	97
132.5	78	78	81	81	81	81	83	85	87	89	89	89
135	72	72	76	76	76	76	76	78	79	79	79	79
137.5	64	64	68	68	68	68	68	70	70	70	72	72
140	58	58	60	60	60	60	60	60	60	62	62	62
142.5	48	48	50	52	52	52	50	50	50	52	52	52
145	41	41	43	45	45	45	43	43	43	43	43	43
147.5	33	33	35	37	37	37	37	35	35	33	35	33
150	23	23	25	27	27	27	27	27	27	27	25	25
152.5	14	16	17	17	19	19	19	19	19	19	19	17
155	6	6	8	10	10	10	10	10	12	14	16	17
157.5	0	0	2	4	6	8	8	10	12	14	16	17
160	0	0	2	4	6	6	8	10	10	12	14	16
162.5	0	0	0	2	4	6	6	8	10	12	12	14
165	0	0	0	0	2	4	6	6	8	10	10	12
167.5	0	0	0	2	2	2	4	6	6	8	8	10
170	0	0	0	2	2	2	2	4	4	6	6	8
172.5	0	0	0	2	2	2	2	2	4	4	6	6
175	0	0	0	0	2	2	2	2	4	4	4	6
177.5	0	0	2	2	2	2	2	4	4	4	4	6
180	2	2	2	2	2	2	2	2	2	2	2	2

Vertical	Horizontal Angles											
Angle	30	32.5	35	37.5	40	42.5	45	47.5	50	52.5	55	57.5
0	413	413	413	413	413	413	413	413	413	413	413	413
2.5	463	463	463	463	460	460	460	456	456	454	452	450
5	496	496	492	485	477	469	463	460	458	452	450	450
7.5	500	494	491	492	491	491	489	491	492	491	487	483
10	531	531	535	539	545	555	558	555	547	543	535	531
12.5	582	595	599	601	599	591	586	578	568	564	556	537
15	601	609	620	628	615	587	572	570	578	587	599	595
17.5	568	587	570	558	568	597	638	648	640	638	636	634
20	520	516	541	574	591	607	619	632	642	675	679	684
22.5	485	512	531	539	568	587	611	636	663	690	715	715
25	510	514	527	531	553	572	601	640	644	653	681	692
27.5	504	524	539	555	572	586	582	595	611	630	667	710
30	514	537	555	580	562	582	580	586	615	638	659	692
32.5	553	560	576	564	576	576	603	615	615	624	620	638
35	601	609	591	591	597	615	619	609	615	620	628	636
37.5	675	650	638	657	655	638	636	644	636	626	628	648
40	735	725	748	714	677	682	688	673	671	682	688	690
42.5	799	801	772	735	770	754	723	733	737	743	737	723
45	838	843	803	814	805	805	840	834	812	799	781	762
47.5	888	830	843	867	878	915	902	902	915	859	812	812
50	847	826	878	892	913	969	989	999	925	900	888	878
52.5	874	847	884	917	960	1033	1033	1020	960	925	975	997
55	898	917	938	993	1031	1084	1086	1037	985	993	1107	1140
57.5	905	969	1024	1063	1128	1177	1156	1094	1041	1088	1218	1268
60	960	1012	1072	1111	1173	1196	1187	1115	1123	1169	1313	1305
62.5	1109	1086	1126	1159	1212	1222	1187	1126	1134	1220	1307	1285
65	1342	1427	1429	1351	1241	1241	1212	1150	1212	1276	1293	1208
67.5	1384	1510	1487	1528	1520	1441	1342	1223	1297	1282	1243	1229
70	1547	1691	1547	1489	1569	1602	1470	1553	1477	1386	1243	1315
72.5	1691	1747	1675	1605	1691	1660	1479	1590	1567	1582	1508	1423
75	1636	1640	1607	1576	1673	1640	1623	1683	1590	1425	1413	1487
77.5	1671	1569	1427	1425	1514	1470	1578	1536	1468	1431	1289	1303
80	1437	1408	1427	1363	1427	1328	1479	1384	1297	1272	1190	1262
82.5	1101	1039	985	999	1063	1111	1396	1388	1171	1115	1158	1200
85	960	913	822	822	824	888	923	892	873	799	902	1128
87.5	805	791	708	719	715	779	743	665	646	597	638	741
90	675	679	611	617	624	686	646	562	547	487	504	518
92.5	589	580	531	531	535	584	580	500	485	411	413	407
95	525	506	469	442	454	485	522	446	425	359	351	341
97.5	456	438	436	370	380	405	460	392	363	318	301	291
100	394	382	394	330	328	332	394	341	306	285	254	244
102.5	337	345	345	295	283	275	318	289	250	240	207	200
105	283	310	289	270	238	237	256	244	204	196	175	165
107.5	235	266	248	233	202	198	202	206	175	165	151	142
110	190	209	207	194	173	167	165	167	155	145	138	132
112.5	159	167	165	163	153	147	145	142	140	136	132	128
115	140	142	143	142	138	134	134	132	132	130	128	126
117.5	124	126	130	128	128	128	128	130	128	126	122	118
120	116	118	120	122	124	124	126	124	122	120	114	111
122.5	111	112	116	118	120	120	120	120	116	111	107	103
125	109	109	112	114	114	114	114	114	111	105	97	91
127.5	105	105	105	107	107	107	107	105	101	95	87	79
130	99	99	97	97	99	97	95	93	89	83	78	70
132.5	89	89	89	87	87	87	83	81	78	72	66	58
135	79	79	79	78	76	76	74	70	66	60	54	47
137.5	72	72	70	68	66	64	62	58	54	48	43	37
140	62	62	60	60	58	54	50	48	43	37	33	29
142.5	52	52	52	50	48	47	43	39	35	27	29	29
145	43	43	41	41	39	37	35	33	31	31	31	31
147.5	33	31	31	29	29	27	25	27	29	31	33	33
150	23	23	19	17	17	19	23	25	25	27	29	29
152.5	16	16	16	16	16	17	17	19	21	23	23	25
155	17	17	17	17	17	17	17	17	17	17	17	17
157.5	19	19	19	19	19	17	17	17	16	16	16	16
160	17	19	21	21	19	19	19	17	17	16	16	16
162.5	16	16	17	17	17	19	19	17	17	17	16	16
165	12	14	14	14	14	14	16	14	14	14	14	14
167.5	10	12	12	12	12	12	12	10	10	12	10	10
170	10	10	10	10	10	10	10	8	8	8	8	8
172.5	8	8	8	8	8	8	6	6	6	6	6	6
175	6	6	6	6	6	4	4	4	4	4	4	4
177.5	6	6	6	6	6	4	4	4	4	4	4	2
180	2	2	2	2	2	2	2	2	2	2	2	2

Vertical	Horizontal Angles											
Angle	60	62.5	65	67.5	70	72.5	75	77.5	80	82.5	85	87.5
0	413	413	413	413	413	413	413	413	413	413	413	413
2.5	448	446	446	442	442	438	434	434	432	428	427	427
5	448	448	450	448	448	446	440	436	432	425	421	415
7.5	477	475	477	479	479	481	483	483	475	465	460	448
10	527	527	518	504	498	500	498	500	500	491	483	467
12.5	524	516	510	512	506	496	492	498	496	496	485	469
15	597	589	570	560	549	543	527	520	514	516	502	487
17.5	622	615	619	613	595	586	572	553	545	541	535	514
20	692	692	682	671	650	619	601	576	551	541	537	522
22.5	702	702	698	688	663	638	611	593	566	555	545	531
25	694	706	727	729	715	694	661	644	613	584	568	553
27.5	715	743	750	754	719	686	651	619	597	570	551	537
30	694	684	715	735	762	737	719	667	632	595	574	551
32.5	673	717	729	745	752	752	745	708	667	628	597	570
35	646	682	739	770	799	830	799	777	698	655	611	572
37.5	675	710	750	781	810	830	828	810	733	663	611	570
40	698	714	741	785	830	845	855	832	770	675	611	560
42.5	719	721	729	766	797	826	836	824	781	688	622	580
45	746	721	723	746	781	851	900	878	845	746	650	587
47.5	779	766	772	760	797	878	969	958	921	849	719	644
50	820	812	812	838	890	1026	1132	1150	1086	1004	841	731
52.5	921	907	896	921	960	1123	1167	1235	1159	1053	936	785
55	1136	1043	1014	962	999	1158	1198	1313	1270	1198	1090	919
57.5	1214	1233	1136	1094	1134	1299	1349	1458	1526	1468	1303	1084
60	1309	1351	1408	1412	1536	1553	1685	1751	1902	1693	1605	1309
62.5	1377	1493	1667	1770	1793	1805	1958	2009	1952	1898	1828	1501
65	1392	1563	1821	1887	2063	1976	2057	2164	2135	2007	1947	1619
67.5	1460	1458	1729	2102	1991	2061	2365	2164	2377	2402	2146	1683
70	1419	1553	1741	1801	2164	2191	2294	2517	2507	2511	2181	1656
72.5	1538	1536	1704	1724	1877	2274	2429	2251	2375	2336	2005	1499
75	1629	1757	1592	1828	1918	1877	1894	2121	2102	1937	1658	1183
77.5	1406	1443	1813	1937	1947	1759	1576	1555	1751	1594	1348	921
80	1313	1204	1396	1602	1815	1584	1400	1227	1227	1235	981	628
82.5	1123	1088	1254	1342	1130	1103	1055	954	841	781	619	401
85	902	940	1055	1014	890	863	779	648	587	525	394	250
87.5	681	739	826	745	615	587	545	438	368	297	223	163
90	500	500	525	522	469	419	366	283	235	182	136	105
92.5	407	370	355	349	324	291	256	206	159	118	89	76
95	339	304	264	244	229	207	180	147	120	93	76	74
97.5	279	260	221	198	176	161	142	118	101	83	72	76
100	225	217	188	165	147	130	114	101	89	78	72	76
102.5	180	171	155	138	124	112	101	89	81	74	72	78
105	155	142	132	122	112	103	93	85	79	72	74	79
107.5	134	126	120	114	107	99	91	85	78	76	78	83
110	126	122	116	111	105	99	93	85	78	79	83	89
112.5	124	120	114	109	103	97	89	81	81	85	89	97
115	120	114	109	103	99	93	83	78	83	87	91	97
117.5	114	109	103	97	91	83	74	78	83	87	91	97
120	105	99	95	89	81	70	68	76	83	85	89	93
122.5	95	89	83	74	64	56	62	72	79	81	83	85
125	85	78	68	58	48	50	56	66	72	76	78	78
127.5	74	64	54	45	43	47	52	58	64	66	68	72
130	60	52	43	37	39	43	47	52	58	58	60	60
132.5	48	41	35	35	39	41	43	47	50	50	50	50
135	41	33	35	37	39	39	41	43	45	45	45	45
137.5	33	35	37	39	39	37	39	39	39	39	39	39
140	31	33	35	37	37	37	37	37	37	35	35	33
142.5	31	31	33	33	33	33	33	33	33	33	31	31
145	31	31	31	31	31	31	31	29	29	29	27	27
147.5	33	33	33	31	31	29	29	27	27	25	25	25
150	31	31	29	29	29	29	29	27	25	23	23	21
152.5	25	25	25	25	25	25	23	23	21	21	19	19
155	17	19	19	19	19	19	19	17	17	17	17	17
157.5	16	16	14	14	14	14	14	14	14	14	14	14
160	14	14	14	14	14	14	14	12	12	12	12	12
162.5	16	14	14	14	12	12	12	12	12	12	12	12
165	14	14	14	14	12	12	12	12	12	12	10	10
167.5	10	10	10	10	10	10	10	10	10	10	10	10
170	8	8	8	8	8	8	8	8	8	8	8	8
172.5	6	6	6	6	6	6	6	6	6	6	6	6
175	4	4	4	4	4	4	4	4	4	4	4	4
177.5	2	4	2	4	2	4	4	4	4	4	4	4
180	2	2	2	2	2	2	2	2	2	2	2	2

Vertical	Horizontal Angles											
Angle	90	92.5	95	97.5	100	102.5	105	107.5	110	112.5	115	117.5
0	413	413	413	413	413	413	413	413	413	413	413	413
2.5	425	423	423	421	421	419	421	419	419	419	417	417
5	413	409	409	407	407	403	399	396	392	388	384	380
7.5	442	436	434	430	423	415	407	399	392	386	382	380
10	456	452	452	440	428	415	407	405	397	388	378	370
12.5	460	458	448	432	417	405	397	388	374	366	359	351
15	473	469	452	436	423	415	399	386	374	365	355	343
17.5	498	489	467	446	430	415	396	384	370	353	339	332
20	502	483	458	438	423	403	390	380	359	349	343	333
22.5	506	483	456	434	411	388	374	355	343	337	330	322
25	520	491	461	436	411	390	370	349	339	332	318	312
27.5	506	475	444	415	390	366	345	333	326	316	306	301
30	518	479	446	417	388	363	341	326	314	301	287	273
32.5	527	485	450	417	388	361	337	324	304	287	270	250
35	529	477	436	407	376	353	330	314	291	270	248	227
37.5	525	467	428	397	363	335	310	289	264	244	223	200
40	510	452	411	382	345	316	287	264	240	215	192	169
42.5	533	471	430	394	349	320	295	260	229	196	165	140
45	533	461	413	378	339	302	271	240	206	175	147	120
47.5	570	485	436	390	351	308	266	233	192	157	124	103
50	613	512	458	399	366	312	270	221	182	140	111	93
52.5	648	510	446	365	337	287	244	202	161	128	101	85
55	725	547	473	419	339	302	240	192	155	122	97	81
57.5	830	609	510	372	333	287	238	200	175	126	97	78
60	902	603	469	366	322	277	231	200	167	120	91	74
62.5	979	562	434	357	318	283	233	204	163	109	81	74
65	1024	541	388	322	295	279	233	184	130	97	78	74
67.5	1016	514	347	297	287	264	221	165	116	87	79	78
70	933	473	314	283	275	260	202	149	112	87	83	81
72.5	791	425	279	250	246	235	186	149	116	95	93	91
75	591	337	237	225	227	221	180	149	130	118	112	112
77.5	419	266	209	207	211	202	178	153	142	143	142	145
80	287	204	182	198	206	192	157	151	149	159	169	176
82.5	211	173	171	180	192	180	173	165	159	165	184	188
85	169	145	153	161	175	178	190	198	188	192	198	202
87.5	136	120	124	140	159	163	176	188	194	213	229	240
90	109	111	112	118	134	151	169	180	190	211	233	246
92.5	83	89	111	126	151	163	167	176	186	206	225	237
95	81	87	95	111	138	157	178	190	198	207	225	225
97.5	87	95	95	105	118	136	161	180	204	240	240	242
100	85	95	97	109	120	132	145	161	184	215	227	262
102.5	87	95	95	103	112	132	147	159	171	182	204	219
105	89	99	97	101	109	122	138	147	161	184	198	194
107.5	91	103	101	103	107	116	122	130	142	159	176	175
110	97	109	109	107	107	109	111	114	124	134	140	138
112.5	105	116	114	109	105	105	105	107	111	111	111	107
115	105	114	114	107	101	99	99	99	99	99	93	85
117.5	101	111	112	103	97	95	93	91	91	87	79	74
120	97	105	107	99	93	89	87	83	79	76	68	62
122.5	89	95	99	91	83	79	76	70	66	64	58	54
125	79	85	87	83	74	68	64	60	56	54	50	47
127.5	72	74	76	74	64	58	54	50	48	47	45	41
130	62	64	64	62	54	48	47	43	41	39	37	35
132.5	50	52	54	54	47	43	39	37	35	35	33	31
135	43	45	47	47	41	37	35	33	31	31	29	25
137.5	37	37	39	41	37	33	31	29	27	25	23	21
140	33	33	35	35	33	29	27	25	23	21	21	19
142.5	29	29	29	31	29	25	23	23	21	19	19	19
145	25	25	25	27	25	23	21	21	19	19	17	17
147.5	23	23	23	23	23	21	19	19	17	17	16	16
150	21	21	21	21	19	19	17	17	17	16	16	14
152.5	19	19	17	17	17	17	16	16	16	14	14	14
155	16	16	16	16	16	16	14	14	14	12	12	10
157.5	14	12	14	12	12	12	12	12	10	10	10	10
160	12	12	12	12	10	10	10	10	10	10	10	8
162.5	12	12	10	10	10	10	10	10	10	8	8	8
165	10	10	10	10	10	10	10	10	8	8	8	8
167.5	10	8	8	8	8	8	8	8	6	6	6	6
170	8	8	8	8	6	6	6	6	6	6	6	6
172.5	6	6	6	6	6	4	4	4	4	4	4	4
175	4	4	4	4	4	4	4	4	2	2	2	2
177.5	4	4	4	4	4	4	2	4	2	2	2	2
180	2	2	2	2	2	2	2	2	2	2	2	2

Vertical	Horizontal Angles											
Angle	120	122.5	125	127.5	130	132.5	135	137.5	140	142.5	145	147.5
0	413	413	413	413	413	413	413	413	413	413	413	413
2.5	415	415	415	413	413	411	411	411	409	409	405	403
5	376	374	376	376	378	378	380	382	380	378	374	372
7.5	372	368	363	357	353	347	343	337	333	330	328	328
10	363	357	351	345	339	332	324	318	312	310	306	304
12.5	345	339	333	328	324	320	316	312	308	302	295	291
15	332	326	320	312	306	304	306	306	306	302	297	291
17.5	328	322	316	312	310	308	301	293	287	287	285	279
20	326	318	314	308	301	295	289	281	273	264	256	250
22.5	318	320	314	301	289	275	264	256	246	240	231	219
25	306	299	289	275	266	256	242	229	213	202	190	180
27.5	287	275	260	246	237	221	207	194	175	161	145	136
30	258	244	231	217	200	180	165	149	136	122	111	101
32.5	231	215	196	176	159	142	126	114	103	93	85	78
35	206	184	163	142	107	111	99	89	79	74	66	62
37.5	176	153	132	114	101	89	79	72	66	60	56	54
40	145	124	107	95	83	74	68	62	58	54	52	50
42.5	118	103	91	79	72	64	60	56	54	50	50	48
45	101	89	78	70	64	60	56	54	52	50	48	47
47.5	87	78	70	64	60	56	54	52	50	48	47	45
50	79	70	66	60	56	54	52	50	48	47	45	41
52.5	74	68	64	60	56	54	50	48	45	43	39	37
55	70	66	62	58	54	52	48	45	41	37	35	31
57.5	70	64	60	58	54	50	45	41	37	33	31	27
60	68	64	60	58	54	48	43	39	33	29	25	21
62.5	70	66	62	58	52	47	41	35	29	25	21	17
65	72	68	66	60	52	45	39	31	25	21	17	16
67.5	76	72	68	62	54	45	37	29	23	19	16	12
70	79	78	74	66	56	45	37	29	21	16	14	10
72.5	91	87	83	72	58	47	37	27	21	16	14	10
75	111	109	101	85	66	52	41	31	23	17	14	12
77.5	142	140	126	101	78	60	45	33	25	17	14	12
80	178	175	151	116	91	70	52	37	27	19	16	14
82.5	200	186	161	128	101	78	58	43	31	23	19	16
85	204	186	159	128	103	79	60	47	33	25	19	16
87.5	229	206	173	136	107	81	60	45	31	23	19	16
90	233	217	184	147	114	87	64	47	33	25	19	16
92.5	221	207	180	149	120	93	72	52	39	29	21	17
95	213	198	167	138	111	85	68	52	41	31	23	19
97.5	219	186	157	132	107	83	64	50	37	29	23	19
100	233	190	157	130	103	79	62	48	37	29	25	21
102.5	200	175	151	128	105	81	62	47	37	29	25	21
105	171	149	130	112	95	78	62	50	39	31	25	21
107.5	155	138	116	99	81	68	54	45	37	29	25	19
110	128	116	103	91	76	60	48	39	33	27	23	19
112.5	99	91	81	74	64	56	47	39	31	25	21	17
115	78	70	62	56	50	45	39	33	29	25	21	17
117.5	66	58	50	45	41	37	31	27	23	21	19	16
120	56	48	43	39	33	31	27	23	21	19	16	16
122.5	48	43	37	33	29	27	23	21	19	17	16	14
125	41	37	33	31	27	25	21	19	17	16	16	14
127.5	37	35	31	27	25	23	19	19	16	16	14	12
130	33	31	27	25	23	21	19	17	16	14	14	12
132.5	29	27	25	21	19	19	17	16	14	14	12	12
135	25	23	19	19	17	17	16	16	14	14	12	12
137.5	21	19	19	17	16	16	16	16	14	14	12	12
140	19	19	17	17	16	16	16	14	14	14	12	10
142.5	17	17	16	16	16	16	14	14	14	12	12	10
145	16	16	16	16	14	14	14	14	14	14	12	10
147.5	16	16	14	14	14	14	14	14	12	12	10	10
150	14	14	14	14	14	12	12	12	12	10	10	8
152.5	12	12	12	12	10	10	10	10	10	10	8	8
155	10	10	10	10	10	10	8	10	8	8	8	8
157.5	8	8	8	8	8	8	8	10	10	8	8	8
160	8	8	8	8	8	8	8	8	8	8	8	8
162.5	8	8	8	8	8	8	8	8	8	8	8	6
165	8	6	6	6	6	6	8	6	6	6	6	6
167.5	6	6	6	6	6	6	6	6	6	6	6	6
170	4	4	4	4	4	4	4	4	6	6	4	4
172.5	4	4	4	4	4	4	4	4	4	4	4	4
175	2	2	2	2	4	4	4	4	4	4	4	4
177.5	2	2	2	4	4	4	4	4	4	4	6	6
180	2	2	2	2	2	2	2	2	2	2	2	2

Vertical	Horizontal Angles											
Angle	150	152.5	155	157.5	160	162.5	165	167.5	170	172.5	175	177.5
0	413	413	413	413	413	413	413	413	413	413	413	413
2.5	401	399	396	394	390	388	386	386	386	382	384	384
5	370	368	365	363	361	359	357	355	353	347	345	345
7.5	326	330	328	324	322	320	316	314	314	312	308	306
10	301	297	295	297	299	297	295	293	291	291	289	287
12.5	289	287	285	283	281	281	281	281	279	279	277	277
15	285	275	271	268	264	260	260	258	256	254	254	254
17.5	268	258	252	244	240	237	233	231	229	225	225	227
20	248	238	225	219	211	206	202	198	196	194	192	190
22.5	211	204	194	182	173	165	157	153	149	145	145	143
25	167	157	149	140	128	122	114	111	107	105	103	103
27.5	126	116	109	101	95	89	85	81	78	76	74	74
30	95	87	79	74	70	66	62	60	58	56	54	54
32.5	72	66	62	58	54	50	48	47	45	43	41	41
35	58	54	50	48	45	43	41	41	39	39	37	37
37.5	50	48	47	45	43	41	41	39	39	37	37	37
40	48	47	45	43	43	41	41	39	39	39	37	39
42.5	47	45	45	43	41	41	39	39	37	35	35	35
45	47	45	43	41	39	37	35	33	33	31	29	29
47.5	43	41	37	35	33	31	29	27	25	25	25	23
50	39	35	33	31	27	25	23	23	21	21	19	19
52.5	33	31	27	25	23	21	19	17	17	16	16	16
55	29	25	23	21	17	16	16	14	14	12	12	12
57.5	23	21	19	16	14	14	12	12	10	10	10	10
60	19	17	14	14	12	10	10	8	6	6	6	10
62.5	16	14	12	10	8	6	6	4	4	4	4	2
65	12	10	8	6	6	4	4	2	2	0	2	0
67.5	10	8	6	4	2	2	2	0	0	0	0	0
70	8	8	6	4	4	2	2	2	2	0	0	0
72.5	10	8	6	4	4	2	2	2	2	2	0	0
75	10	8	6	4	4	2	2	2	2	2	2	2
77.5	10	8	6	6	4	2	2	2	2	2	2	2
80	10	10	8	6	4	2	4	2	2	2	2	2
82.5	12	12	8	8	6	4	4	4	4	2	2	2
85	14	12	10	8	6	4	4	4	4	4	2	2
87.5	14	12	10	8	6	4	4	4	4	2	4	2
90	14	12	10	8	6	6	4	4	4	4	4	4
92.5	16	14	12	10	6	6	4	4	4	4	4	4
95	17	16	12	10	6	6	6	4	4	4	4	2
97.5	17	16	12	10	6	6	6	4	4	4	4	4
100	17	16	14	10	8	6	6	4	4	4	4	2
102.5	19	16	14	10	8	6	6	4	4	4	4	4
105	17	16	12	8	6	6	4	4	4	4	4	2
107.5	17	16	12	8	6	6	4	4	4	4	2	2
110	16	16	12	10	6	6	4	4	4	4	2	2
112.5	16	14	12	8	6	6	4	4	4	2	2	2
115	14	12	10	8	6	4	4	4	2	2	2	2
117.5	14	12	10	8	4	4	4	2	2	2	2	2
120	12	12	8	6	4	2	2	2	2	2	2	2
122.5	12	10	8	6	4	2	2	2	2	2	0	0
125	12	10	8	6	4	2	2	2	2	2	0	0
127.5	10	10	6	6	4	2	2	2	2	2	0	0
130	10	10	6	6	4	2	2	2	2	2	0	0
132.5	10	8	6	6	2	2	2	2	2	0	0	0
135	10	8	6	6	4	2	2	2	0	0	0	0
137.5	10	8	6	4	4	2	2	2	0	0	0	0
140	10	8	6	4	2	2	2	2	2	0	0	0
142.5	10	8	6	4	2	2	2	2	0	0	0	0
145	10	8	6	4	2	2	2	2	2	0	0	0
147.5	8	6	4	4	2	2	2	0	0	0	0	0
150	8	6	4	4	2	2	2	0	0	0	0	0
152.5	8	6	4	4	2	2	2	2	0	0	0	0
155	6	6	4	4	2	2	2	2	0	0	0	0
157.5	8	6	4	4	2	2	2	2	2	0	0	0
160	6	6	4	4	2	2	2	2	0	0	0	0
162.5	6	4	4	4	2	2	2	2	0	0	0	0
165	6	4	4	2	2	2	0	0	0	0	0	0
167.5	4	4	4	2	2	2	0	0	0	0	0	0
170	4	4	4	2	2	2	2	2	0	0	0	0
172.5	4	4	4	2	2	2	0	0	0	0	0	0
175	4	4	4	2	2	2	2	0	0	0	0	0
177.5	6	4	4	2	2	2	2	2	0	0	0	0
180	2	2	2	2	2	2	2	2	2	2	2	2

Vertical	Horizontal Angles											
Angle	180	182.5	185	187.5	190	192.5	195	197.5	200	202.5	205	207.5
0	413	413	413	413	413	413	413	413	413	413	413	413
2.5	349	349	349	351	353	355	357	359	363	363	365	366
5	310	310	312	314	318	320	320	322	326	328	332	335
7.5	285	285	287	291	291	293	295	297	301	301	302	302
10	273	273	275	277	277	279	281	281	281	283	285	287
12.5	256	256	260	260	260	262	264	268	270	273	275	279
15	229	231	233	231	233	237	240	242	244	248	256	266
17.5	198	198	198	217	204	207	209	213	219	227	237	244
20	153	153	155	157	161	167	171	176	184	196	207	219
22.5	111	111	111	114	118	122	126	134	142	151	163	173
25	79	81	81	83	87	89	95	99	107	114	122	132
27.5	58	58	60	62	64	66	70	74	79	85	91	97
30	43	43	45	45	47	48	52	56	58	62	68	72
32.5	37	37	37	39	41	41	43	47	48	50	54	58
35	37	35	35	37	37	39	41	43	45	47	48	50
37.5	37	35	37	37	39	39	41	43	43	45	47	48
40	37	35	35	37	37	39	41	43	43	45	47	48
42.5	31	29	29	31	33	35	37	39	41	43	45	47
45	25	23	23	25	27	27	31	33	35	37	41	43
47.5	21	19	19	19	21	23	25	27	29	31	35	39
50	17	12	14	14	16	17	19	21	23	25	29	31
52.5	14	10	10	12	12	14	16	17	19	21	25	27
55	10	6	6	8	8	10	10	12	14	16	19	21
57.5	8	4	4	4	6	6	8	8	10	12	16	17
60	6	2	2	2	2	6	6	6	8	10	12	14
62.5	2	0	0	0	0	2	2	4	4	6	8	12
65	0	0	0	0	0	0	0	2	2	4	6	8
67.5	2	0	0	0	0	0	0	0	0	4	4	6
70	2	0	0	0	0	0	0	0	2	4	4	6
72.5	2	0	0	0	0	0	0	2	2	4	6	8
75	2	0	0	0	0	0	2	2	4	6	6	8
77.5	2	0	0	2	2	2	2	4	4	6	8	10
80	2	2	4	4	4	4	4	6	6	8	10	12
82.5	4	4	4	4	4	4	4	6	8	10	12	14
85	4	4	4	4	4	4	6	6	8	10	12	14
87.5	4	4	4	4	6	6	6	6	8	12	14	16
90	4	6	6	6	6	6	6	8	10	12	14	16
92.5	4	4	4	4	4	4	6	6	8	10	16	17
95	2	4	4	4	4	4	6	6	8	12	14	17
97.5	4	4	4	4	4	4	6	6	8	12	16	17
100	4	4	4	4	4	4	4	6	6	10	14	17
102.5	2	2	4	4	4	4	4	6	6	10	14	16
105	2	2	2	2	2	4	4	4	6	10	14	16
107.5	2	2	2	2	2	4	4	4	6	10	14	16
110	2	2	2	2	4	4	4	4	6	10	12	16
112.5	2	2	2	2	2	2	4	4	6	8	12	14
115	2	0	0	0	2	2	2	2	4	8	10	12
117.5	0	0	0	2	2	2	2	2	4	8	10	12
120	2	0	0	0	0	2	2	2	4	6	10	12
122.5	0	0	0	0	0	0	2	2	4	6	8	10
125	0	0	0	0	0	2	2	2	4	6	8	10
127.5	0	0	0	0	0	2	2	2	2	6	6	10
130	0	0	0	0	0	0	2	2	2	6	6	8
132.5	0	0	0	0	0	0	0	2	2	4	6	8
135	0	0	0	0	0	0	2	2	2	4	6	8
137.5	0	0	0	0	0	0	2	2	2	4	6	8
140	0	0	0	0	0	2	2	2	2	4	6	8
142.5	0	0	0	0	0	0	2	2	2	4	6	8
145	0	0	0	0	2	2	2	2	2	4	6	8
147.5	0	0	0	2	2	2	2	2	4	4	6	8
150	0	0	0	0	0	2	2	2	4	4	6	8
152.5	0	0	0	0	2	2	2	2	2	4	6	6
155	0	0	0	0	0	2	2	2	2	4	4	6
157.5	0	0	0	0	0	2	2	2	4	4	4	6
160	0	0	0	0	0	2	2	2	2	2	4	4
162.5	0	0	0	0	0	2	2	2	2	4	4	6
165	0	0	0	0	0	2	2	2	2	4	4	4
167.5	0	0	0	2	2	2	2	4	4	4	4	6
170	0	0	0	2	2	2	2	2	4	4	4	6
172.5	0	2	2	2	2	2	2	4	4	4	6	6
175	0	0	0	0	2	2	2	2	4	4	4	6
177.5	0	0	2	2	2	2	2	4	4	4	6	6
180	2	2	2	2	2	2	2	2	2	2	2	2

Vertical	Horizontal Angles											
Angle	210	212.5	215	217.5	220	222.5	225	227.5	230	232.5	235	237.5
0	413	413	413	413	413	413	413	413	413	413	413	413
2.5	368	370	372	372	374	378	380	384	386	388	392	396
5	339	341	343	345	347	349	351	351	355	361	365	368
7.5	302	304	308	312	316	322	328	332	337	341	349	357
10	291	293	297	302	308	314	318	324	330	339	349	357
12.5	287	293	299	302	306	310	318	320	322	324	330	335
15	273	281	289	297	299	304	310	314	320	326	332	337
17.5	256	264	270	277	285	295	302	308	316	318	322	330
20	229	237	248	256	264	271	279	289	301	310	322	328
22.5	186	198	211	221	231	242	258	270	283	295	306	314
25	143	153	165	178	192	211	229	242	254	268	283	297
27.5	105	114	126	138	153	169	184	202	219	238	254	271
30	79	87	95	105	114	128	143	161	178	198	217	235
32.5	62	68	74	81	89	101	112	126	142	161	180	204
35	54	58	60	66	72	79	89	101	112	130	149	173
37.5	50	52	54	58	62	68	74	81	93	107	122	142
40	50	50	52	54	58	62	66	72	79	89	103	118
42.5	48	50	50	52	54	58	60	64	70	78	87	101
45	47	48	50	50	52	54	58	60	64	70	78	87
47.5	41	45	47	50	52	54	56	60	62	66	72	81
50	35	39	43	45	48	50	54	56	60	62	68	74
52.5	31	33	37	41	45	48	54	56	60	64	66	72
55	25	29	31	35	41	45	50	54	60	62	66	70
57.5	19	23	27	31	35	41	47	54	58	62	68	72
60	17	19	23	27	33	39	45	52	58	64	70	74
62.5	14	17	19	25	29	37	45	52	60	66	72	76
65	10	14	17	23	29	35	45	54	64	72	78	81
67.5	8	12	14	19	25	33	43	54	66	78	83	89
70	8	12	14	19	25	35	45	58	74	89	99	103
72.5	10	12	16	21	29	39	52	66	85	107	122	126
75	10	14	17	23	33	45	62	79	103	132	161	165
77.5	12	14	19	25	37	52	72	95	122	157	196	211
80	16	19	23	31	43	60	83	109	138	171	211	240
82.5	16	19	25	33	47	64	87	112	142	176	213	250
85	16	19	23	31	45	62	85	114	145	182	221	254
87.5	16	19	23	33	45	62	87	118	153	194	231	258
90	17	21	27	35	48	68	91	122	155	188	221	242
92.5	19	21	27	37	50	66	87	112	143	173	202	225
95	19	21	27	35	47	62	81	107	134	159	188	215
97.5	21	23	27	35	45	58	76	101	128	155	184	217
100	19	21	25	31	41	54	72	97	120	147	171	190
102.5	17	21	25	31	41	54	70	89	109	126	145	163
105	17	21	25	31	39	48	60	76	91	109	126	143
107.5	17	21	23	29	35	41	52	64	79	93	109	124
110	16	19	21	25	31	39	47	56	68	78	89	101
112.5	16	17	21	23	29	33	41	47	54	60	70	79
115	14	16	17	21	25	29	33	39	43	48	56	64
117.5	14	16	17	19	21	25	29	33	35	41	47	54
120	14	16	16	17	19	21	25	29	31	35	41	47
122.5	12	14	14	16	17	19	23	25	29	31	35	39
125	12	14	14	16	17	19	21	23	27	29	31	35
127.5	10	12	14	14	16	17	19	21	23	27	29	31
130	10	12	12	14	14	16	17	19	19	21	25	27
132.5	10	12	12	14	14	16	16	17	17	19	21	23
135	10	12	12	14	14	14	16	16	17	17	19	19
137.5	10	12	12	14	14	14	16	16	16	17	17	19
140	10	12	12	14	14	14	16	16	16	16	17	17
142.5	10	10	12	12	14	14	14	16	16	16	16	17
145	8	10	10	12	12	14	14	14	16	16	16	16
147.5	8	10	10	10	12	12	12	14	14	14	16	16
150	8	8	10	10	10	10	10	10	10	12	12	12
152.5	8	10	10	10	10	10	8	8	10	10	10	10
155	8	8	10	10	10	10	8	8	8	8	8	8
157.5	6	8	8	8	8	10	10	8	8	8	8	10
160	6	8	8	8	8	8	8	8	8	8	8	8
162.5	6	6	6	6	6	6	6	6	6	6	8	8
165	4	6	6	6	6	6	6	6	6	6	6	6
167.5	6	6	6	6	6	6	6	6	6	6	6	6
170	6	6	6	6	4	4	4	4	4	4	4	4
172.5	6	6	6	6	6	4	4	4	4	4	4	4
175	6	6	6	4	4	4	4	4	4	2	2	2
177.5	6	6	6	6	4	4	4	4	4	4	4	4
180	2	2	2	2	2	2	2	2	2	2	2	2

Vertical	Horizontal Angles											
Angle	240	242.5	245	247.5	250	252.5	255	257.5	260	262.5	265	267.5
0	413	413	413	413	413	413	413	413	413	413	413	413
2.5	401	403	407	409	415	419	421	423	423	423	425	425
5	370	372	378	382	388	396	401	407	413	419	421	425
7.5	365	374	386	396	401	405	413	425	436	444	450	456
10	365	368	374	382	390	397	401	409	419	432	440	446
12.5	345	357	368	380	394	403	419	425	436	450	467	475
15	341	347	359	370	380	390	405	425	436	454	473	485
17.5	339	349	355	365	380	394	407	428	448	467	487	506
20	335	347	355	359	368	386	399	415	438	454	475	496
22.5	320	328	337	349	361	378	401	419	442	463	485	512
25	310	322	330	343	351	368	390	407	428	450	471	496
27.5	283	297	310	326	343	359	384	409	432	454	479	510
30	256	275	295	312	332	347	368	399	421	444	469	504
32.5	227	250	271	295	320	341	363	399	428	450	479	520
35	198	221	246	271	297	324	347	388	421	442	471	520
37.5	165	190	217	244	270	302	326	370	411	432	465	518
40	136	161	188	219	250	289	330	374	413	440	471	522
42.5	116	142	176	211	244	281	310	349	397	430	465	520
45	103	122	153	186	223	260	295	343	394	434	475	527
47.5	91	111	138	175	221	270	310	366	417	473	522	599
50	87	103	126	159	198	237	281	339	386	452	506	587
52.5	83	105	130	161	196	237	299	339	403	479	529	650
55	76	99	130	190	223	242	283	326	359	446	568	708
57.5	76	89	124	178	217	248	285	332	366	442	547	727
60	78	83	112	161	217	268	310	353	372	430	535	704
62.5	79	83	107	155	213	266	316	353	370	403	539	675
65	85	87	95	132	190	248	308	314	328	359	485	650
67.5	91	95	97	120	171	221	293	320	316	330	423	589
70	105	107	111	124	171	213	268	293	285	287	357	522
72.5	134	134	138	143	180	207	250	273	270	262	297	452
75	173	175	173	169	186	207	231	260	252	235	248	366
77.5	209	211	198	184	188	198	217	250	231	211	211	283
80	235	231	211	198	200	198	206	223	217	194	186	217
82.5	260	246	235	223	221	209	209	200	176	159	159	159
85	279	270	252	235	221	202	184	169	151	138	122	122
87.5	281	277	252	227	207	190	173	151	130	114	109	107
90	260	264	242	217	200	186	176	165	149	124	105	89
92.5	242	250	238	221	209	198	182	155	132	107	95	89
95	242	252	256	237	209	182	161	138	118	105	101	99
97.5	256	252	233	215	190	167	149	138	122	109	103	101
100	213	219	200	186	180	167	153	136	118	107	103	101
102.5	184	198	190	176	169	163	147	128	114	107	109	105
105	161	175	173	161	147	142	134	126	118	112	114	111
107.5	138	147	147	142	134	128	124	122	122	122	128	122
110	112	120	124	124	122	118	118	118	122	128	136	128
112.5	91	101	107	112	112	112	112	114	118	124	130	122
115	76	85	93	99	105	105	109	111	112	120	126	116
117.5	64	72	79	85	91	95	99	101	107	116	118	111
120	54	60	66	72	76	79	85	89	97	107	107	99
122.5	45	50	56	60	64	68	72	78	85	97	95	89
125	39	43	48	50	54	56	60	66	74	85	81	78
127.5	33	37	39	43	45	48	50	56	64	72	70	66
130	29	31	33	35	37	41	43	48	56	60	56	54
132.5	25	27	29	31	31	33	35	41	45	48	47	45
135	21	23	25	27	29	29	31	35	39	41	39	37
137.5	19	21	21	23	25	25	27	31	35	35	33	33
140	19	19	19	21	21	23	25	27	29	29	29	29
142.5	17	17	17	19	21	21	23	25	27	27	25	25
145	16	17	17	19	19	21	21	23	25	25	25	25
147.5	16	16	16	17	17	19	19	21	21	21	21	21
150	14	14	14	16	16	17	17	17	17	19	17	19
152.5	10	10	12	12	14	14	14	16	16	16	16	16
155	8	10	10	10	10	12	12	12	12	12	12	12
157.5	10	10	10	10	10	10	10	10	10	12	12	12
160	8	8	10	10	10	10	10	10	10	12	12	12
162.5	8	8	8	8	10	10	10	10	10	10	10	10
165	6	6	6	8	8	8	8	8	8	8	8	8
167.5	6	6	6	6	6	6	6	8	8	8	8	8
170	4	4	4	4	4	4	6	6	6	6	6	6
172.5	4	4	4	4	4	4	4	4	4	4	6	4
175	2	2	2	2	2	2	2	2	2	4	4	2
177.5	2	4	2	4	4	4	4	4	4	4	4	4
180	2	2	2	2	2	2	2	2	2	2	2	2

Vertical	Horizontal Angles											
Angle	270	272.5	275	277.5	280	282.5	285	287.5	290	292.5	295	297.5
0	413	413	413	413	413	413	413	413	413	413	413	413
2.5	425	428	432	436	442	446	454	460	465	469	471	473
5	425	432	440	450	458	463	467	467	465	463	461	460
7.5	458	469	483	494	502	504	504	504	502	506	514	518
10	450	460	473	481	483	487	487	496	510	524	531	543
12.5	481	498	518	525	527	529	545	558	566	578	582	586
15	498	518	537	539	545	558	566	578	589	607	622	630
17.5	522	549	566	578	591	609	624	644	663	677	694	700
20	520	545	558	576	595	617	648	675	702	725	756	762
22.5	539	570	589	617	644	671	696	721	725	739	748	735
25	527	556	582	605	640	675	727	766	781	797	781	779
27.5	547	582	611	644	677	712	762	746	764	743	764	760
30	547	584	619	651	682	746	760	789	783	801	776	739
32.5	568	611	659	702	760	822	828	838	814	789	754	727
35	570	624	681	737	840	861	894	898	894	853	779	735
37.5	574	632	700	791	892	921	964	962	938	851	814	770
40	576	632	698	807	867	921	962	975	929	863	828	810
42.5	591	675	760	894	923	977	975	948	884	845	834	830
45	619	729	857	969	997	1041	1047	975	894	874	865	861
47.5	735	867	1028	1126	1237	1258	1254	1080	981	938	921	933
50	760	952	1140	1268	1351	1404	1408	1167	1064	1037	1053	1030
52.5	873	1094	1291	1379	1508	1501	1487	1264	1175	1148	1171	1274
55	997	1289	1512	1687	1702	1712	1549	1423	1309	1295	1332	1456
57.5	1123	1536	1803	1925	2026	1987	1788	1778	1615	1526	1543	1572
60	1192	1761	1904	2158	2294	2152	2011	1861	1875	1826	1759	1782
62.5	1237	1790	2015	2150	2290	2317	2098	2142	2121	1978	1830	1615
65	1237	1817	2133	2358	2317	2350	2206	2245	2080	2164	1877	1530
67.5	1208	1813	2127	2396	2451	2334	2493	2210	2208	1939	1708	1456
70	1033	1605	2011	2362	2356	2443	2383	2216	1826	1819	1863	1780
72.5	797	1332	1764	2022	2175	2080	1894	1912	1805	1793	1747	1805
75	574	1024	1379	1621	1631	1553	1652	1890	1949	1894	1675	1512
77.5	394	737	1053	1241	1239	1305	1441	1755	1790	1404	1216	1328
80	264	465	667	816	894	1012	1033	1159	1322	1212	1123	1154
82.5	176	250	351	471	533	632	752	855	1014	1031	960	929
85	136	169	215	283	355	440	518	607	731	805	764	741
87.5	97	105	140	186	242	304	370	438	518	531	520	539
90	79	78	95	130	171	223	271	314	349	370	392	434
92.5	78	72	76	99	124	155	190	213	237	264	312	349
95	81	72	74	85	101	120	140	159	182	211	258	275
97.5	85	76	72	79	89	97	112	128	147	176	209	219
100	83	76	72	76	81	87	95	107	120	138	157	173
102.5	87	78	74	76	78	81	87	97	105	114	126	140
105	95	87	79	76	79	81	85	93	99	105	111	120
107.5	105	97	91	85	83	85	87	93	99	101	105	111
110	114	107	97	89	83	85	87	93	99	101	105	107
112.5	111	105	99	91	83	79	85	91	97	101	103	105
115	107	103	97	93	83	74	78	89	95	99	103	103
117.5	105	99	95	91	81	70	66	79	93	97	99	103
120	93	91	89	83	76	66	56	64	79	93	95	99
122.5	87	87	81	79	68	58	50	48	60	79	89	95
125	76	74	72	68	62	54	47	43	43	60	76	87
127.5	66	66	62	60	56	48	43	39	37	41	56	70
130	54	54	52	52	48	45	39	35	33	33	39	52
132.5	45	45	45	43	41	39	37	33	31	31	31	37
135	37	37	37	37	35	35	33	31	31	33	31	29
137.5	33	33	35	35	35	33	31	33	33	31	31	29
140	29	31	31	31	31	31	31	31	31	31	31	31
142.5	27	27	27	27	29	29	29	29	31	33	33	33
145	25	27	27	27	29	29	31	31	31	31	31	31
147.5	23	23	23	25	25	25	27	27	27	27	27	27
150	19	19	19	21	21	21	23	23	21	21	21	21
152.5	16	16	16	16	16	17	17	17	16	16	16	16
155	12	12	12	12	14	14	14	14	14	14	14	14
157.5	12	12	12	12	12	12	14	14	14	14	14	16
160	12	12	12	12	12	12	14	14	14	14	14	16
162.5	10	10	10	12	12	12	12	12	12	12	12	12
165	8	10	10	10	8	8	8	8	8	8	8	8
167.5	8	8	8	8	8	8	8	8	8	6	8	8
170	6	6	6	6	6	6	6	6	6	6	6	6
172.5	4	6	6	6	4	4	4	4	4	4	4	4
175	2	2	2	2	2	2	2	2	2	2	2	2
177.5	4	4	4	4	2	4	2	2	2	2	2	2
180	2	2	2	2	2	2	2	2	2	2	2	2

Vertical	Horizontal Angles											
Angle	300	302.5	305	307.5	310	312.5	315	317.5	320	322.5	325	327.5
0	413	413	413	413	413	413	413	413	413	413	413	413
2.5	477	477	477	477	477	477	477	477	475	471	471	467
5	458	460	463	469	477	483	487	491	496	502	508	516
7.5	524	522	518	522	527	531	537	539	535	529	525	525
10	560	576	587	595	593	589	587	587	587	586	587	582
12.5	582	570	570	578	589	607	620	636	646	644	638	620
15	634	646	659	661	653	628	611	597	591	603	613	615
17.5	706	686	673	679	657	644	640	632	589	562	558	566
20	746	737	714	700	682	644	617	611	584	560	537	514
22.5	739	727	735	712	682	650	617	587	562	553	533	525
25	739	714	686	673	644	644	624	597	589	564	547	529
27.5	750	719	692	659	640	617	615	622	593	570	558	533
30	704	681	675	671	655	636	607	597	603	597	570	558
32.5	696	692	671	655	646	646	642	624	613	619	626	611
35	698	673	675	682	686	679	669	679	673	669	665	675
37.5	746	733	712	715	715	731	727	715	727	739	743	754
40	801	799	799	785	764	766	789	791	812	807	812	814
42.5	845	871	874	869	871	863	874	859	853	861	874	874
45	902	921	956	989	1002	979	936	929	938	909	904	900
47.5	977	997	1035	1059	1066	1076	1059	997	944	929	902	909
50	1064	1121	1072	1072	1140	1138	1115	1057	989	948	915	913
52.5	1245	1223	1165	1140	1175	1208	1183	1117	1063	989	969	952
55	1384	1408	1245	1208	1227	1274	1293	1194	1140	1088	1028	991
57.5	1534	1491	1371	1272	1309	1342	1330	1313	1202	1142	1057	1051
60	1551	1530	1448	1317	1315	1355	1349	1359	1253	1225	1148	1161
62.5	1446	1520	1448	1384	1328	1375	1396	1390	1367	1483	1456	1505
65	1483	1390	1454	1452	1392	1464	1605	1633	1790	1830	1716	1571
67.5	1590	1406	1627	1636	1708	1726	1856	1782	1753	1702	1784	1716
70	1584	1708	1815	1786	1799	1685	1782	1815	1784	1762	1898	1811
72.5	1627	1729	1574	1702	1790	1825	1768	1838	1761	1790	1861	1774
75	1390	1392	1600	1642	1704	1803	1640	1679	1578	1634	1729	1762
77.5	1359	1264	1400	1419	1543	1615	1481	1520	1491	1691	1702	1759
80	1249	1173	1245	1284	1503	1588	1328	1251	1181	1185	1208	1299
82.5	1064	1012	929	960	1022	1095	1028	956	954	944	1002	1117
85	750	692	667	717	791	876	890	824	814	818	849	927
87.5	543	549	539	603	671	764	766	714	706	715	727	776
90	432	454	450	539	595	665	657	609	584	611	640	679
92.5	349	380	386	477	510	582	543	498	479	529	560	603
95	291	320	333	409	425	485	434	409	399	473	492	518
97.5	246	260	291	330	353	392	355	345	345	425	428	438
100	198	206	238	258	291	316	287	297	301	370	370	366
102.5	155	167	192	200	244	248	235	248	260	308	310	297
105	128	140	153	165	196	192	194	202	223	252	252	237
107.5	114	124	130	142	155	155	161	167	194	202	207	192
110	111	116	118	124	128	130	138	145	161	165	167	159
112.5	109	111	111	112	114	116	118	124	132	134	134	132
115	105	107	109	109	109	109	111	111	114	114	116	114
117.5	103	105	107	109	109	109	109	109	109	109	109	109
120	103	105	107	109	111	111	111	111	109	107	105	105
122.5	99	101	107	109	111	111	111	112	111	109	107	105
125	91	97	103	105	107	111	111	112	111	109	107	105
127.5	81	89	93	97	101	105	107	107	105	105	105	103
130	66	78	83	89	93	97	97	97	97	99	99	97
132.5	50	62	72	79	83	85	85	87	89	89	89	87
135	37	47	56	64	70	74	76	78	79	79	79	78
137.5	27	31	41	48	56	60	66	68	70	70	68	70
140	29	29	29	39	45	50	54	56	58	58	60	60
142.5	33	31	31	29	31	37	41	43	45	47	47	47
145	31	31	29	27	27	25	27	29	31	33	35	35
147.5	27	27	25	23	21	19	17	17	17	21	23	25
150	19	19	17	17	17	16	16	16	16	16	16	17
152.5	16	16	16	16	16	16	17	17	17	17	19	17
155	14	14	16	16	17	17	19	19	19	19	17	16
157.5	16	16	17	17	17	19	17	17	17	17	16	14
160	16	16	16	16	16	16	16	14	14	14	12	12
162.5	12	12	12	12	12	12	12	12	12	12	10	10
165	8	8	8	10	8	8	8	10	8	8	8	8
167.5	6	6	8	6	8	8	8	8	8	8	8	8
170	4	6	6	6	6	6	6	6	6	6	6	6
172.5	4	4	4	4	4	4	6	4	6	4	4	4
175	2	2	2	2	2	4	4	4	4	4	4	4
177.5	2	2	2	4	4	4	4	4	4	4	6	6
180	2	2	2	2	2	2	2	2	2	2	2	2

Vertical	Horizontal Angles											
Angle	330	332.5	335	337.5	340	342.5	345	347.5	350	352.5	355	357.5
0	413	413	413	413	413	413	413	413	413	413	413	413
2.5	465	465	465	465	465	465	465	463	460	456	450	448
5	524	529	529	525	520	514	512	512	510	504	494	487
7.5	529	537	551	570	572	570	564	555	553	543	529	516
10	568	555	555	564	578	601	607	603	587	586	564	545
12.5	601	589	570	549	543	551	564	582	574	556	547	522
15	599	574	547	543	531	516	522	535	547	525	510	496
17.5	564	549	529	506	491	491	473	471	481	483	465	452
20	508	510	504	494	479	467	469	461	463	469	461	452
22.5	504	477	502	498	487	469	454	452	448	452	456	440
25	516	494	481	489	485	473	452	444	442	440	446	438
27.5	522	512	489	477	496	487	473	461	456	456	467	460
30	537	533	533	514	510	529	514	498	483	481	492	492
32.5	595	570	564	572	562	587	580	562	549	553	556	562
35	665	657	628	628	632	636	651	630	622	611	617	630
37.5	752	741	704	671	684	682	708	688	667	646	653	659
40	818	801	781	727	704	688	704	690	663	632	651	651
42.5	871	830	793	746	694	692	694	712	675	648	667	659
45	884	857	828	777	715	712	710	745	696	677	677	665
47.5	909	878	843	803	733	712	729	760	723	692	700	675
50	948	917	847	818	752	712	735	768	764	715	731	694
52.5	979	954	890	874	809	746	754	779	801	733	745	708
55	1000	1004	952	935	882	810	807	824	867	797	793	774
57.5	1053	1086	1020	987	991	921	936	960	1047	981	938	946
60	1187	1297	1206	1297	1270	1229	1200	1185	1315	1239	1074	1140
62.5	1512	1592	1363	1388	1338	1293	1183	1173	1320	1229	1086	1128
65	1569	1569	1415	1433	1466	1398	1225	1247	1412	1324	1136	1206
67.5	1770	1691	1617	1539	1609	1481	1256	1313	1450	1410	1204	1260
70	1813	1729	1695	1553	1638	1493	1262	1287	1384	1386	1150	1222
72.5	1681	1617	1634	1415	1553	1419	1220	1214	1326	1340	1111	1208
75	1664	1629	1671	1497	1603	1479	1317	1220	1334	1326	1099	1196
77.5	1501	1375	1377	1194	1245	1156	1004	923	1002	989	840	902
80	1159	1095	1107	1000	1010	973	888	781	830	838	733	766
82.5	993	929	905	855	830	843	774	684	731	756	663	694
85	830	768	760	770	739	770	715	630	671	702	622	651
87.5	710	671	665	708	675	710	659	578	607	626	555	580
90	628	605	601	642	611	624	584	508	531	545	500	516
92.5	556	527	524	560	535	549	508	444	458	467	430	444
95	469	448	458	479	463	469	438	384	394	399	370	376
97.5	401	378	396	409	394	397	368	320	328	328	306	308
100	337	318	335	343	328	324	297	258	260	260	246	246
102.5	277	270	277	275	264	256	237	209	209	209	200	198
105	231	221	229	219	215	204	190	175	175	173	165	163
107.5	188	180	190	180	176	167	157	149	149	145	142	140
110	155	153	157	153	149	143	138	132	132	130	128	126
112.5	132	132	132	130	128	124	122	118	118	116	114	114
115	116	116	114	114	112	111	109	107	107	105	105	103
117.5	109	107	105	105	103	101	99	99	99	97	97	95
120	105	103	99	99	97	95	93	93	93	91	89	89
122.5	103	101	99	97	93	91	89	89	89	85	83	83
125	101	99	99	95	93	89	89	87	87	83	83	83
127.5	99	97	97	93	89	87	85	85	85	81	79	81
130	93	93	91	89	85	83	81	81	81	78	78	78
132.5	87	105	83	81	78	78	76	76	74	72	72	72
135	79	78	76	72	70	70	70	70	68	66	66	66
137.5	70	68	66	62	62	62	62	64	60	58	60	58
140	58	56	54	52	54	54	54	54	52	50	52	50
142.5	47	47	45	45	47	47	48	47	45	43	43	43
145	37	37	37	39	39	41	41	39	37	35	35	35
147.5	27	29	31	31	31	31	31	29	27	27	27	27
150	21	23	23	21	21	21	21	19	19	19	17	17
152.5	17	16	14	12	12	12	12	12	10	10	8	8
155	14	14	12	10	8	6	4	4	2	0	0	0
157.5	14	12	10	10	8	6	4	4	2	0	0	0
160	10	10	8	6	6	4	4	2	0	0	0	0
162.5	10	8	8	6	4	4	2	2	0	0	0	0
165	8	8	6	6	4	2	2	0	0	0	0	0
167.5	8	6	6	4	4	2	2	0	0	0	0	0
170	6	6	4	2	2	2	0	0	0	0	0	0
172.5	4	4	2	2	2	2	2	0	0	0	0	0
175	4	4	4	2	2	2	0	0	0	0	0	0
177.5	4	4	4	2	2	2	2	2	0	0	0	0
180	2	2	2	2	2	2	2	2	2	2	2	2

Vertical Angle	Horizontal Angles 360
0	413
2.5	432
5	456
7.5	494
10	522
12.5	531
15	502
17.5	467
20	446
22.5	450
25	436
27.5	438
30	461
32.5	500
35	566
37.5	619
40	640
42.5	626
45	646
47.5	640
50	644
52.5	661
55	690
57.5	770
60	987
62.5	1074
65	1090
67.5	1150
70	1200
72.5	1158
75	1190
77.5	1047
80	814
82.5	702
85	648
87.5	603
90	533
92.5	469
95	407
97.5	345
100	281
102.5	229
105	186
107.5	157
110	138
112.5	124
115	112
117.5	105
120	95
122.5	89
125	85
127.5	83
130	81
132.5	78
135	72
137.5	64
140	58
142.5	48
145	41
147.5	33
150	23
152.5	14
155	6
157.5	0
160	0
162.5	0
165	0
167.5	0
170	0
172.5	0
175	0
177.5	0
180	2

MINUTES FOR THE VILLAGE OF SHOREWOOD HILLS
PLAN COMMISSION

The Tuesday, March 15, 2016 meeting of the Plan Commission was called to order at 7:00 p.m. by Mark Sundquist. On call of the roll members present were: David Benforado, Earl Munson, Karl Wellensiek, Jim Etmanczyk, Debra Remington and Brauna Hartzell. Also present was Karl Frantz, Village Administrator.

Public Hearing on conditional use permit application for an addition to the Shorewood School

Opened public hearing at 7:01 pm

Mike Hearding, Chief of Operation at Madison Metropolitan School District (MMSD), gave a brief background on the proposed project, along with Steve Kiekhaffer, Architect for the project and Chad Weise, Executive Director of Service.

There was a $41 million dollar referendum passed with an 81% yes vote to improve the Madison Metropolitan School District Facilities. Currently there are 16 projects underway and four of them near completion with eight getting ready to go to bid. The projects are mostly centered on floor area and remodeling, some technology and infrastructure as well as accessibility. The Shorewood School project is focused on accessibility.

The two concerns to some Village residents are the location of the elevator shafts and the loss of green space. There were several different locations addressed for placement of the elevator.

Steve Kiekhaffer, architect, explained the need to provide accessibility at the main entrance of the building on Shorewood Blvd., with a handicap ramp installed and the elevator located on the west wing of the building. This would also involve improvement to the driveway entrance with widening components. There are two diagrams to show the different concepts of accessibility. Currently, the upper and lower levels are not accessible from the inside of the building.

Bill Thomas, 3230 Tally Ho Lane, asked if there would be a net loss of classroom space with cutting through one of the rooms.

Peggy Scallon, 1022 Shorewood Blvd, asked about the proposed elevator location at the south west side of the west wing.

Steve stated that location was chosen based on easy access to what currently exists for accessibility. Had they not chosen this location, the others would cut into a classroom on both the upper and lower levels. With the location of the stairwell, it would have been impossible not to disturb the current classroom space.

Fred Wade, 1121 Wellesley Road, stated the concern is a current basketball court being affected and is there a reason it couldn't go to the northern corridor.

Steve Kiekhaffer stated that would affect a larger internal space including classrooms and bathrooms.

The elevator addition is 11 feet 4 inches long by 27 feet 4 inches wide. The four square courts will need to be relocated but the basketball court will stay where it currently is located. The elevator will be surrounded by sidewalk and hard surface.

Mrs. Remington asked if the school district will re-grade the space next to the basketball courts where it drops off to install the new four square courts.

Steve stated that is part of the cost of the project to clean up that area and re-install those courts.

John Voegeli, 1004 Yale Road, asked why the elevator couldn't be located near the stairway by the Principals office to avoid, loss of green space, tearing out the four square courts and the huge addition sticking out the south side of the building.

Steve stated that would close off the current exit at that location as well as the access to the upper and lower levels by the existing stairway being taken out for the elevator to be installed.
Mike stated the reason that stairway remained intact was after the voluntary meeting with school staff who indicated that would negatively impact the traffic flow inside the school and were against that stairway being removed.
Peggy Scallon, 1022 Shorewood Blvd, asked how much additional paved space will there be with this project and the widening of the entrance to the staff parking lot.
Steve indicated the additional paved space will be doubled to 20 feet wide compared to the approximately 11 feet wide that currently exists.
Mike stated the green space falls right in the middle of the 32 elementary schools in the Madison school district and that is a concern. The basketball court is approximately 8,000 square feet of hard surface. The Madison School District is concerned that there is adequate green space for the kids to play on at Shorewood Elementary.
Mr. Frantz stated that due to this projects size it will likely trigger the village's stormwater ordinance and regulations based on land disturbance and therefore additional landscape will likely be needed.
John Voegeli, 1004 Yale Road asked if the widening of the road was code or if it was just what was wanted by the fire department.
Steve indicated it was what the fire department wanted. This is slightly less than what the code is.
Closed public hearing at 7:35 pm
Mr. Etmanczyk asked if the school district had seen the letter from Vierbicher with regards to the basketball court and four square courts.
Dan Lindstrom, Vierbicher consultant, summarized his letter of recommendations.
Mark Redsten, 1022 Shorewood Blvd, stated the concern about moving the basketball court and it being degraded. He stated the four square courts are proposed in the only green space available for kids to play football. It's a highly used green space.
Mr. Sundquist stated the current plan in front of them indicates that only two four square courts are being moved and the other two are staying where they are. Vierbicher's letter suggests putting them all on the east side of the building instead.
John Voegeli, 1004 Yale Road, is not as concerned regarding parking spaces as he is about the elevator addition. If they put it in the parking lot, the village doesn't lose the green space, four square courts, and basketball court. The village strives off our unique ambiance and it will slowly be taken away if we allow the school to put their plans in place.
Peggy Scallon, 1022 Shorewood Blvd, MMSD standard for what is appropriate for green space doesn't have to be the same for what Shorewood Hills' standards are.
Mr. Benforado, inquired on if the entire school and basketball court will be closed during construction due to asbestos. The basketball court is heavily used throughout the summer and the village would like to be reassured that this project doesn't fall to the wayside and be put on hold.
Steve stated the project would start Friday, June 10 2016 and would be done by enrollment day making it a tight timeline. If this project were to be approved tonight, the elevator would be ordered as they take a long time to get one.
Mr. Benforado moved and Mr. Etmanczyk seconded a motion to recommend approval of the conditional use permit for an addition to the Shorewood School with attached findings and compliance with Vierbicher's memo dated 3/15/16.
Voted: 7-0
Passed unanimously

Public Hearing on rezoning of property located at 2801-2725 Marshall Court from C-3 to Planned Unit Development General Development Plan

Opened public hearing at 8:34 pm

Rich Arneson, Stone House Development, gave a brief presentation of the 95 unit apartment building with 10,000 square feet of commercial space for the medical office of Psychiatric Services. This would be done in two phases. The first phase would be 36 units on top of the 10,000 square feet of commercial space. After that is finished the second phase would start about 10-12 months after. There are two levels of underground parking under each building. There would be a dedication of land to the village for street use as well as a portion to complete the bike path. Stone House is requesting the zoning be approved for a four story building instead of the three stories currently approved in the neighborhood plan.

Kevin Burro, Knothe and Bruce Architects, explained the building height in comparison to Shakelton Square Condominiums. Shackelton Square's ridge height is 930 feet above sea level and Stone House is proposing a height of 48 foot or ridge elevation of 929 feet above sea level, asking for an exception of two feet. Kevin explained the shadow study that has been completed.

Mr. Benforado asked about vacancies and if he was expecting 5%.

Rich stated he was close to 0% at Arbor Crossing and doesn't expect this new development to be any different.

William Thomas, 3230 Tally Ho Lane, inquired about the affordable housing planned for this development.

Rich Arneson stated the intent is to have up to twelve units at 60% median income. It's the same as it was in the first phase of this project at Arbor Crossing. There will be as many as seven three bedroom units balanced out by some one bedroom, but that has not been determined yet.

Michael Stiennon, 2814 Marshall Court, was disappointed with the financial report. He stated the developer's financials are unverifiable. He shared his concern with the traffic report and how the street is too narrow to have such high density traffic and will create more parking issues for residents.

Robert Stephen, 2280 Marshall Court Unit #3, has concern with the amount of green space that will be left on Marshall Court after this development is done. He also has concern about the infrastructure for water and sewer on Marshall Court and how saturated it becomes when there is a heavy downpour. Mr. Stephen stated that when there is a fire alarm at Shackelton Square everything on Marshall Court stops for the fire trucks, but when people continue to enter, it proceeds to jam the street with traffic. He asked how many renters there are compared to homeowners and how that might affect our political votes.

Dan Levin, works at 2737 Marshall Court at Psychiatric Services, is very excited about this project and the quality of the proposed project. Psychiatric Services has been on Marshall Court for over 50 years and they are excited to have the opportunity to be a part of this new project that will also meet their needs.

Alan Himble, Middleton resident, part of ownership in 2727 Marshall Court, stated they are in support of the project.

Closed public hearing at 9:32 pm.

Mr. Sundquist asked the developers to address some of Michael Stiennon's concerns.

Scott Harrington, Vandewalle, cost and revenues submitted by Stone House is very comparable to other projects in the village especially Pyare. Rents will be on the top end of what is seen on Marshall Court based on $1.75 per square foot. Vandewalle reached the same results in regards to the economics on the three stories versus four stories building as what Stone House presented

from Vierbicher. The four stories are at or above the benchmarks for two of the benchmarks and the three stories are at or below the benchmarks on all four measurements.
Mr. Munson asked a series of questions regarding the analysis and development of the Marshall Court area by Vandewalle. There was an extensive conversation on development of this area and apartment dwellings versus single family homes in the village.
Mr. Arneson stated the Arbor Crossing II buildings would be stepped back on the fourth floor to avoid the canyon feel.
Mr. Benforado suggests that rumble strips be installed where the bike path meet up with Marshall Court. He also states he would like to explore an overpass.
Jeff Held, Strand Associates, gave a brief summary of the traffic study and the update from the 2008 study. The results indicate they are directly where they anticipated being with traffic studies after the 800 University Bay Drive and Arbor Crossing I were complete. The afternoon shows there are fewer cars than anticipated. Expecting 15-25 % more cars after the Arbor Crossing II is complete. There doesn't seem to be a concern with speed or crashes on Marshall Court. The peak hours for traffic on Marshall Court are 7:15-8:15 am and 4-5 pm.
The Plan Commission decided to recess this topic until the future April 12, 2016 Plan Commission meeting.

Approve previous meeting minutes
Minutes deferred until the next meeting.

The meeting was then adjourned at 11:00 pm.
Respectfully submitted,

Karla Endres
Deputy Clerk

Plan Commission Conditional Use Permit Review

The Plan Commission will forward its written advisory recommendation to the Village Board within ninty (90) days after receipt of the application from the Zoning Administrator. The Plan Commission shall recommend approval, approval subject to specified conditions, or denial. A recommendation for denial shall include the reasons, including which standards contained in the Plan Commission review are found not to be met.

The Plan Commission shall review the application according to the standards below. No application shall be recommended for approval by the Plan Commission unless it finds that the following conditions are met:

1. That the establishment, maintenance or operation of the conditional use will not be detrimental to or endanger the public health, safety, morals, comfort or general welfare.

Finding: Yes. The addition of elevation and ramp to make the entire school ADA accessible is a welcome and needed capitol improvement.

2. That the uses, values and enjoyment of other property in the neighborhood for purposes already permitted shall be in no foreseeable manner substantially impaired or diminished by the establishment, maintenance or operation of the conditional use and the proposed use is compatible with the use of adjacent land.

Finding: Yes.

3. That the establishment of the conditional use will not impede the normal and orderly development and improvement of the surrounding property for uses permitted in the district, and will not be contrary to an adopted comprehensive plan of the Village.

Finding: Yes. The Village Comprehensive Plan recognizes Shorewood Elementary School as an integral part of our community, and this is a welcome improvement.

4. That adequate utilities, access roads, drainage and other necessary site improvements have been, are being or will be provided.

Finding: Yes.

5. That the establishment, maintenance or operation of the conditional use is unlikely to increase the level of traffic congestion or reduce the level of safety at any point on the public streets.

Finding: Yes.

6. That the conditional use shall conform to all applicable regulations of the district in which it is located.

Finding: Yes.

7. That the conditional use does not violate flood plain regulations governing the site.

Finding: Yes.

8. That, when applying the above standards to any new construction of a building, or an addition to an existing building, the Plan Commission and Board shall bear in mind the statement of purpose for the zoning district such that the proposed building or addition at its location does not defeat the purposes and objectives of the zoning district.

Finding: Yes.

The Plan Commission shall also evaluate the effect of the proposed conditional use upon:

- The maintenance of safe and healthful conditions.

Finding: Yes. Safety improved with addition of elevators, ramp, and improved access road to inner staff parking lot.

The prevention and control of water pollution including sedimentation.

Finding: Yes (abide by village stormwater and erosion control ordinances).

- Existing topographic and drainage features and vegetative cover on the site.

Finding: Yes (do not alter or disturb landscaping elements to the south of the basketball court)

- The location of the site with respect to floodplains and floodways of rivers and streams.

Finding: N/A

- The erosion potential of the site based upon degree and direction of slope, soil type and vegetative cover.

Finding: Abide by village erosion control ordinance.

- The location of the site with respect to existing or future access roads.

Finding: This project will improve the access road from Columbia Road to the inner parking lot, particularly fire truck and ambulance access.

- The need of the proposed use for a shoreland location.

Finding: N/A.

- Its compatibility with uses on adjacent land.

Finding: Yes. The project minimally encroaches on the south paved asphalt recreation area, and replace three four square court that are eliminated with three just east of the existing basketball court.

- The amount of liquid wastes to be generated and the adequacy of the proposed disposal systems.

Finding: N/A.

Regarding the establishment, maintenance or operation of the conditional use applied for, the Plan Commission shall specify whatever reasonable conditions it deems necessary and appropriate to fulfill the intent of this Chapter. The conditions may include requirements relating to any of the following:

- Landscaping conditions required: Madison Metropolitan School District (MMSD) to prepare landscaping plan for area between south of the school and basketball court.

- Type of construction conditions required: See “Other Requirements” at the end. See other requirements at end.

- Construction commencement and completion dates conditions required: N/A

- Surety conditions required: N/A

- Lighting conditions required: Any new lighting fixtures must comply with village dark sky ordinance. MMSD will consider retrofitting existing lighting fixtures in the area of construction to that standard as well.

- Fencing conditions required: MMSD will fence off asphalt basketball court to comply with condition that no vehicles park on or transit across the court, and that the basketball court not used as staging or storage area.

- Operational control conditions required: N/A

- Hours of operation conditions required: MMSD to comply with village noise ordinance, and make sure that contractors and their employees abide by it.

- Traffic magnitude or congestion conditions required: MMSD will implement off-street parking plan for all construction vehicles.

- Deed restrictions conditions required: N/A

- Access restrictions conditions required: N/A

- Setbacks and yards conditions required: N/A

- Planting screens conditions required: N/A

- Modifications in parking conditions required: N/A

- Architecture, exterior colors and exterior materials conditions required: N/A

- Increasing emphasis on, and effectiveness of, Transportation Demand Management alternatives conditions required: N/A

- Any other requirements necessary to fulfill the purpose and intent of the Zoning Code of the Village of Shorewood Hills conditions required:

1.) Abide by village noise ordinance, and make sure the contractors and their employees understand and abide by it.

2.) Abide by village dark sky ordinance for any new lighting, and consider retrofitting existing lighting to that standard as well.

3.) Abide by village stormwater and erosion control ordinances.

4.) MMSD to develop off-street parking plan for all construction employees (e.g. - use of inner staff parking lot).

5.) Keep all vehicles and construction equipment OFF the asphalted basketball court south of the school (*unless the equipment is required to be there for immediate work (i.e. no parking, no crossing), and make sure contractors understand and abide.

6.) Village asks MMSD to be aware that Shorewood Blvd and the "Village Green" (south of the school) will be used extensively for the Village's July 4th festivities, and to plan accordingly.

7.) The nine conditions in the Vierbicher letter dated 3/15/2016 (with item "D" modified to reflect relocation of three 4-square courts to the east of the basketball court using permeable paving).

MEMO TO: Karl Frantz and Village Board
FROM: Corey George, Village Forester
DATE: April 15, 2016
SUBJECT: Request for Additional Tree Planting Funds

The Parks Committee and Forestry Department are requesting an additional $2,500 for tree planting and landscaping in 2016. The Forestry tree planting budget for 2016 ($8,000) is falling short of our replanting goals. There are several reasons for this: Tree costs are increasing. Nurseries have a shortage of trees and costs are up. EAB is a major factor in that equation. The main reason however for our budget shortfall this year, is due to a landscape project on Oxford Road that was recently approved by the UW. The Parks Committee and Forestry Department have been working on this landscape plan since 2013 and would like to move forward with the planting.

Background:
When Oxford Road was reconstructed, many of the trees in this area were removed. Unlike other street reconstruction projects there wasn't additional money available to replant at the time. The road was also shifted north during the reconstruction and now most of the green space is on UW property. Currently the area is lawn and the Village has been mowing it. The UW is not interested in replanting or maintaining the area, but recently approved a landscape plan created by the Parks Committee, Forestry Department and village residents. In addition to approving the plan, the UW is developing a legal document that will allow the Village to plant and maintain this area.

Village residents have expressed an overwhelming interest to replant this area since 2013. There have been a variety of reasons for the interest, but the main reason was the loss of vegetation and screening. Residents on Wellesley Road would like to see a green buffer from the UW maintenance buildings on Haight Street. I've attached a signed petition from residents.

The northeast end of Oxford Road was a designated Village Entrance with the traditional Shorewood Hills signage. The signage was removed during the street reconstruction, but the DPW replaced it last year. Village resident Devra Rich (Master Gardener) has provided significant input to the landscape plan with an emphasis on making this a beautiful entrance to our community. This entrance is also home to our Bird City and Tree City signs so we feel we should make true those claims. Most of the plantings are native trees and shrubs that are bird friendly!

Volunteers:
If funding for this project is approved at the April 18th Village Board meeting, we have a large group of volunteers (Blackhawk Church – Love Madison Event) that would help plant the trees on Sunday, May 1st.

Thanks for you time and consideration on this matter.

May 7, 2015

Village of Shorewood Hills Forester

Hello Corey,

We appreciate this opportunity for residents near Oxford Road to provide input on the re-vegetation of the strip of land between Oxford Road and Haight Street. The recent clearing of this area exposed the UW maintenance building and parking lot, which is a stark eyesore compared to the previous green screen of weedy trees and shrubs. But removal of those weedy plants offers a great opportunity to improve the space in a manner that reinforces the Village's designation as a Tree City USA and Bird City Wisconsin member.

We urge you to incorporate evergreen trees along the north side of this parcel of land to provide some screen from the newly exposed eyesores. Juniper and arborvitae would be great choices in the area of the power lines because they shouldn't get tall enough to require removal or trimming in the future. You might consider larger evergreens like spruce or pine trees on the north side where they wouldn't interfere with the power lines. And we hope that we can get some quality hardwoods, like hickory or oak in the mix. An understory of flowering trees would also be a great addition. We urge you to include bird friendly shrubs in the plan.

We anticipate that neighborhood residents will pitch in to help with the removal of additional weedy shrubs, help with planting and watering new trees and shrubs, and assist with managing weedy vegetation in the future.

Thanks for considering the interests of residents of affected neighborhoods as you make plans for the Oxford-Haight corridor.

Ken Albrecht
1231 Wellesley Rd.

Blair + Karen Matthews
1240 Wellesley Rd.

Meg Little 1244 Wellesley Rd
Madison WI 53705

Leora Sapozhnik
1051 Sweetbriar Rd

Ann Schaffer
2812 Oxford Road

Frank Sasse
1214 Wellesley

Mark Wolfgram
1219 Wellesley Road

Kathryn A Allen
1223 Wellesley Rd

Ann Peterson
1219 Wellesley RD

Irmgard Carpenter
1245 Wellesley Rd.

Emily Gieb
1234 Wellesley Rd.

Eric Barber
1234 Wellesley Rd.

Shanna McDonald
2707 Oxford Road

Karen Johnson Matthews
1240 Wellesley

John Logan 2805 Oxford Rd

John Martin-Kiefaber
1226 Wellesley

Bruce Martin-Kiefaber
1226 Wellesley Rd

Andrew Kiefaber
1226 Wellesley Rd

[illegible]
1230 Wellesley Rd

Jacqueline Doyle
2701 Oxford Rd

Sean Doyle
2701 Oxford Rd.

Carol Barfield
1212 Wellesley Rd.

Colleen Boyle Albrecht
1231 Wellesley Rd

Frank Weinhold
1235 Wellesley Rd

Mariana Weinhold

MINUTES FOR THE VILLAGE OF SHOREWOOD HILLS
PLAN COMMISSION

The Tuesday, February 9, 2016 meeting of the Plan Commission was called to order at 7:01 p.m. by Dave Benforado. On call of the roll members present were: Earl Munson, Karl Wellensiek, Jim Etmanczyk, Debra Remington and Brauna Hartzell. Also present was Karl Frantz, Village Administrator, Karla Endres Deputy Clerk. Excused from the meeting was Mark Sundquist

No minutes to approve

Mr. Frantz gave a brief overview on the need for the two TID creations and the amendment to TID 3.
Dan Lindstrom, Vierbicher consultant, presented the options for the creation of TID 5 and TID 6 as well as the amendment to TID 3. TID 3 is running out of money for project plans. The plan is to amend the spending plan to include University Avenue reconstruction, complete Marshall Court reconstruction, complete the bike path construction and increase the development incentives for additional affordable units.
TID 6 is for the area containing the proposed project of Arbor Crossing Phase II. The TID would technically include five parcels with three of them being medical buildings currently. It would be a 20 year mixed use TID and Arbor Crossing is asking for $2.8 million in TIF assistance.
TID 5 is located to include the Pyare Square parcels. Currently, the property is assessed at $3.75 million with an additional $1 million in demolition costs. The property is considered blighted due to 95% of the property is vacant.

Public hearing on project plan and boundary of proposed Tax Increment District #5
Opened the public hearing at 8:12 pm
Michael Stiennon, 2814 Marshall Court, shared his concerned about the different TID's being created and their benefit to the village that some are more beneficial than others financially and believes they should be more even.
Mr. Frantz explained that there are various factors that contribute to the increment created in a TID. Amendment #2 to TID 3 will be the most beneficial for the village as that will contribute to a large portion of the University Avenue construction an take that burden off the taxpayers in the village.
Closed public hearing at 8:34 pm

Consider recommendation/ action delineating boundaries and adopting project plan for Tax Increment District #5
Mr. Wellensiek moved and Mr. Etmanczyk seconded a recommendation delineating boundaries and adopting the project plan for TID #5 with the technical corrections presented by Dan Lindstom at Vierbicher and the correction to the properly listed state agency on page 10.
Mr. Benforado added that McDonald's parcel would not be included in the boundaries.
Voted: 6-0
Passed unanimously

Public hearing on project plan and boundary of proposed Tax Increment District #6
Opened public hearing at 8:39 pm
Dan Lindstrom stated there were a few technical corrections to be included.

Closed public hearing at 8:40 pm

Consider recommendation/action delineating boundaries and adopting project plan for Tax Increment District #6
Mr. Munson moved and Mr. Etmanczyk seconded a motion to defer consideration on TID #6 until the Plan Commission hears what Stone House plans are.
Mr. Benforado stated that by doing this, it would take the timeline out of sequence for these TID approvals.
Mrs. Hartzell stated she would be in favor of TID #6 if the Stone House language was removed from the TID.
Mr. Benforado agreed with Mrs. Hartzell and stated he would rather not have to present to the Joint Review Board twice. He would like to present all three TID's at the same time to instill confidence in the creations and not waste the Joint Review Board and the School Board's time by having to have two separate meetings if TID #6 was not approved tonight.
Voted: 2-4
Failed

Mr. Wellensiek moves and Mrs. Hartzell seconds a motion to approve TID #6 with technical and state agency correction of resolution with Stone House being removed and that the Board has developers agreement in hand.
Voted: 5-1 (Mr. Munson abstained)
Passed.

Public hearing on project plan amendment for Tax Increment District #3
Mr. Wellensiek moved and Mr. Etmanczyk seconded a motion to recommend amendment #2 to TID #3 with the update to the state agency name.
Mr. Wellensiek strongly recommended the $500,000 of increment financing goes to affordable housing at AT&T.
Voted: 6-0
Passed unanimously

Discussion and any recommendations concerning UW-Madison recreational sports master plan and U Bay fields
Mr. Frantz gave a brief update on the Joint West Committee meeting regarding the Joint West Fields. The environmental study of the Joint West Fields would not be sufficient for the U. Bay Fields project in the future.

Set possible Feb/March meeting date additions/changes and possible agenda items
March 15, 2016 would be the next Plan Commission meeting and the Madison Metropolitan School District would likely be an agenda item for consideration of their $1 million renovation to install elevator shafts at the Shorewood Hills Elementary school.
The Plan Commission decided there should be a special meeting to discuss the Corbae garage project.

The meeting was then adjourned at 9:26 pm.
Respectfully submitted,

Karla Endres
Deputy Clerk

MINUTES FOR THE VILLAGE OF SHOREWOOD HILLS
PLAN COMMISSION

The Tuesday, February 23, 2016 meeting of the Plan Commission was called to order at 7:00 p.m. by Mark Sundquist. On call of the roll members present were: David Benforado, Earl Munson, Karl Wellensiek, Jim Etmanczyk and Brauna Hartzell. Also present was Karl Frantz, Village Administrator. Excused from the meeting was Debra Remington.

Review and recommendation on conditional use permit application to allow construction of an attached garage at property located at 3210 Lake Mendota Drive

Mr. Sundquist gave an overview of the proposed project.
Mr. Frantz explained that there have been three projects that impacted views substantially along Lake Mendota Drive since the conditional use permit requirement went into effect.
Mr. Munson gave the example of his west side windows at his home on Lake Mendota Drive, that when the neighbor builds on that lot, he will lose his view from those windows.
Mr. Frantz stated that more than 50% of the view across the lot is still maintained.
Dean Corbae, owner of 3210 Lake Mendota Drive, stated that only one tree, a birch tree next to the existing garage, will be affected by the construction of the garage.
Mr. Munson stated that the safety issue with the Corbae's daughter's car has made him change his mind on this project. He stated that anyone including children and friends of their children visiting the house will all be subject to this safety concern. Mr. Munson stated that if the Corbae's would build a flat roof, he would vote in favor of the project. This might not satisfy the Corbae's desire to have a roof that compliments the current house architecture but it will satisfy the neighbors that would be adversely affected by the views of the lake diminishing.
Scott Friedman, 3209 Lake Mendota Drive, stated that he objected to the Corbae's building the garage where it's being proposed and would still like to see it pushed back off the street more closely in front of where the current garage stands.
John Icke, 3214 Lake Mendota Drive, suggested Mr. Corbae install heating coils in the driveway to take away the safety concerns during the winter months as in the summer there are no safety concerns with vehicles sliding down the driveway.
Margaret Corbae, owner of 3210 Lake Mendota Drive, stated that the safety concern is year round with the grade of the current driveway. One has to accelerate to get out of the driveway and hope that there are no little children walking or anyone coming from Eagle Heights as you don't have the opportunity to slowly creep up the driveway.
Mrs. Hartzell stated there is a safety concern with the third parties like EMS, Fire and Police having potential of being injured or difficulty gaining access.
Mr. Munson moved and Jim Etmanczyk seconded a motion to approve the conditional use permit at 3210 Lake Mendota Drive to allow construction of an attached garage as shown on the revised plans in the packet.
Mr. Wellensiek's hope was that this matter could be resolved by the neighbors and not brought back to the Plan Commission.
The Plan Commission went through the findings. See attached findings.
Applicant will discuss the tree trimming and foliage as ways to improve the views to the Lake for adjacent neighbors.
Mr. Frantz stated that in 2007 the Plan Commission revised requirements on the conditional use permit eliminating some of the requirements such as noise, construction vehicles, bonds, surety, etc.
Voted: 6-0
Passed unanimously

Approve previous meeting minutes
Mr. Benforado moved and Mr. Etmanczyk seconded a motion to approve minutes from January 12, 2016 with changes noted.
Voted: 6-0
Passed unanimously

The meeting was then adjourned at 8:35 pm.
Respectfully submitted,

Karla Endres
Deputy Clerk

April 8, 2016

Dear Shorewood Hills Resident,

You are receiving this letter because your property is adjacent to a Shorewood Hills Park or public green space. There's a natural tendency for residents to use adjacent public land for activities which are not allowed. Please take time this spring to inspect your property line and make sure you're not encroaching on the public spaces.

The following are NOT allowed:

- FIREWOOD or STONE stacks
- LEAVES or BRUSH piles
  (Make sure contractors don't blow leaves into parks.)
- GARDEN or LAWN extensions
  (Invasive groundcovers are a big problem: Bishops weed, Celandine Poppy, Creeping Bellflower, Japanese Knotweed.)

Solutions:

- Place plant material on the terrace in front of your house.
  (The Village Crew collects yard waste regularly.)
- Compost yard waste in your own yard.
- Hire a contractor to remove it.

If you have questions or concerns, please contact a member of the Parks Committee. We are residents who volunteer on the Parks Committee to represent public interest. The Parks Committee oversees the work of the Village Forester. The Village Forester is responsible for managing the parklands in a way that promotes healthy, diverse natural areas as stated in the Shorewood Hills Parks and Open Spaces Plan. If these issues interest you, consider joining the committee to help oversee the long-term management of Shorewood Hills Parklands.

Thank you for your attention to this issue.

Your Parks Committee,

Anne Readel, Chairperson
David Boutwell
Sue Denholm
Roma Lenehan
Kathie Brock
Nancy Heiden
Georgene Stratman